Chipsmall Limited consists of a professional team with an average of over 10 year of expertise in the distribution of electronic components. Based in Hongkong, we have already established firm and mutual-benefit business relationships with customers from,Europe,America and south Asia,supplying obsolete and hard-to-find components to meet their specific needs.

With the principle of “Quality Parts,Customers Priority,Honest Operation,and Considerate Service”,our business mainly focus on the distribution of electronic components. Line cards we deal with include Microchip,ALPS,ROHM,Xilinx,Pulse,ON,Everlight and Freescale. Main products comprise IC,Modules,Potentiometer,IC Socket,Relay,Connector.Our parts cover such applications as commercial,industrial, and automotives areas.

We are looking forward to setting up business relationship with you and hope to provide you with the best service and solution. Let us make a better world for our industry!

Contact us

Tel: +86-755-8981 8866 Fax: +86-755-8427 6832
Email & Skype: info@chipsmall.com Web: www.chipsmall.com
Address: A1208, Overseas Decoration Building, #122 Zhenhua RD., Futian, Shenzhen, China

Applications

- Thermoplastic enclosure for industrial applications
- ECO version: base with smooth side walls, lid version standard or transparent
- PCI version: base with knock-outs for cable glands

Included in delivery

Enclosure consisting of lid, seal incl. captive +/- lid screws, set of screws for fastening, incl. sealing caps.

Technical data

Material:
PS thermoplastic

Colour:
RAL 7035, light grey
special colour on request

Ingress protection:
IP 66 to EN 60529

Impact resistance:
2 Joule to EN 60068-2-75

Flammability:
UL 94 HB

Insulation:
protection class II to VDE 0140

Toxicity:
low halogen

Weather resistance:
generally good, do not expose to direct sun light

Chemical resistance:
generally good, but not resistant to benzine, diesel, oils and fats as well as strong acids

Temperature range:
-25°C to +40°C

Programme range

Type	Order No.	Dimensions	Type	Order No.	Mounting plate	DIN rail TS 15					DIN rail TS35				
						49.5 mm	80 mm	92 mm	111 mm	154 mm	81 mm	106 mm	144 mm	216 mm	336 mm
ECO 01-6	***60.07 07 11***	65 x 65 x 57	PCI 01-6M	***60.07 07 15***	•	•									
ECO 01-8	***60.07 07 21***	65 x 65 x 81			•	•									
ECO 02-6	***60.07 09 11***	65 x 94 x 57	PCI 02-6M	***60.07 09 15***	•	•	•								
ECO 02-8	***60.07 09 21***	65 x 94 x 81			•	•	•								
ECO 03-6	***60.09 09 11***	94 x 94 x 57	PCI 03-6M	***60.09 09 15***	•		•								
ECO 03-8	***60.09 09 21***	94 x 94 x 81			•		•								
ECO 03-6 t	***60.09 09 12***	94 x 94 x 57			•		•								
ECO 03-8 t	***60.09 09 22***	94 x 94 x 81			•		•								
ECO 04-6	***60.09 13 11***	94 x 130 x 57	PCI 04-6M	***60.09 13 15***	•		•	•	•		•	•			
ECO 04-8	***60.09 13 21***	94 x 130 x 81			•		•	•	•		•	•			
ECO 04-6 t	***60.09 13 12***	94 x 130 x 57			•		•	•	•		•	•			
ECO 04-8 t	***60.09 13 22***	94 x 130 x 81			•		•	•	•		•	•			
ECO 05-7	***60.11 11 11***	110 x 110 x 66			•		•	•			•				
ECO 05-9	***60.11 11 21***	110 x 110 x 90	PCI 05-9M	***60.11 11 15***	•		•	•			•				
ECO 05-7 t	***60.11 11 12***	110 x 110 x 66			•		•	•			•				
ECO 05-9 t	***60.11 11 22***	110 x 110 x 90			•		•	•			•				
ECO 06-7	***60.13 13 11***	130 x 130 x 75	PCI 06-7M	***60.13 13 15***	•		•	•	•		•	•			
ECO 06-10	***60.13 13 21***	130 x 130 x 99			•		•	•	•		•	•			
ECO 06-7 t	***60.13 13 12***	130 x 130 x 75			•		•	•	•		•	•			
ECO 06-10 t	***60.13 13 22***	130 x 130 x 99			•		•	•	•		•	•			
ECO 07-6	***60.09 18 11***	94 x 180 x 57	PCI 07-6M	***60.09 18 15***	•		•			•	•		•		
ECO 07-8	***60.09 18 21***	94 x 180 x 81			•		•			•	•		•		
ECO 07-6 t	***60.09 18 12***	94 x 180 x 57			•		•			•	•		•		
ECO 07-8 t	***60.09 18 22***	94 x 180 x 81			•		•			•	•		•		
ECO 08-9	***60.11 18 11***	110 x 180 x 90	PCI 08-9M	***60.11 18 15***	•		•	•		•	•		•		
ECO 08-11	***60.11 18 21***	110 x 180 x 111	PCI 08-11M	***60.11 18 25***	•		•	•		•	•		•		
ECO 08-9 t	***60.11 18 12***	110 x 180 x 90			•		•	•		•	•		•		
ECO 08-11 t	***60.11 18 22***	110 x 180 x 111			•		•	•		•	•		•		
ECO 09-9	***60.18 18 11***	180 x 182 x 90	PCI 09-9M	***60.18 18 15***	•					•			•		
ECO 09-11	***60.18 18 21***	180 x 182 x 111	PCI 09-11M	***60.18 18 25***	•					•			•		
ECO 09-16	***60.18 18 31***	180 x 182 x 165			•					•			•		
ECO 09-9 t	***60.18 18 12***	180 x 182 x 90			•					•			•		
ECO 09-11 t	***60.18 18 22***	180 x 182 x 111			•					•			•		
ECO 09-16 t	***60.18 18 32***	180 x 182 x 165			•					•			•		
ECO 10-6	***60.18 25 10***	180 x 254 x 63	PCI 10-6M	***60.18 25 05***						•			•	•	
ECO 10-9	***60.18 25 11***	180 x 254 x 90	PCI 10-9M	***60.18 25 15***	•					•			•	•	
ECO 10-11	***60.18 25 21***	180 x 254 x 111	PCI 10-11M	***60.18 25 25***	•					•				•	
ECO 10-16	***60.18 25 31***	180 x 254 x 165			•					•				•	
ECO 10-6t	***60.18 25 09***	180 x 254 x 63			•					•			•	•	
ECO 10-9 t	***60.18 25 12***	180 x 254 x 90			•					•				•	
ECO 10-11 t	***60.18 25 22***	180 x 254 x 111			•					•				•	
ECO 10-16 t	***60.18 25 32***	180 x 254 x 165			•					•			•	•	
ECO 11-11	***60.25 36 11***	254 x 361 x 111	PCI 11-11M	***60.25 36 15***	•									•	•
ECO 11-16	***60.25 36 21***	254 x 361 x 165			•									•	•
ECO 11-11 t	***60.25 36 12***	254 x 361 x 111			•									•	•
ECO 11-16 t	***60.25 36 22***	254 x 361 x 165			•									•	•

t = Transparent lid

Accessories

External mounting brackets	***60.00 04 00***
External hinge (set) to ECO/PCI 07- (small)	***60.00 04 07***
External hinge (set) from ECO/PCI 08- (large)	***60.00 04 08***
Knurled screw (set)	***60.00 04 01***
Spacers (set = 8 pcs.)	***60.00 04 02***

Accessories

Mounting plate
made of plastic, 2.5 mm thick, incl. self-tapping fastening screws and spacers

Order No.	
60.00 01 01	for ECO/PCI 01-
60.00 01 02	for ECO/PCI 02-
60.00 01 03	for ECO/PCI 03-
60.00 01 04	for ECO/PCI 04-
60.00 01 05	for ECO/PCI 05-
60.00 01 06	for ECO/PCI 06-
60.00 01 07	for ECO/PCI 07-
60.00 01 08	for ECO/PCI 08-
60.00 01 09	for ECO/PCI 09-
60.00 01 10	for ECO/PCI 10-
60.00 01 11	for ECO/PCI 11-

Mounting rails

Order No.	
TS 15	
60.00 02 01	49.5 mm for ECO/PCI 01/02-
60.00 02 02	80 mm for ECO/PCI 02/03-
60.00 02 03	92 mm for ECO/PCI 04/05-
60.00 02 04	111 mm for ECO/PCI 04/06-
60.00 02 05	154 mm for ECO/PCI 07-
TS 35/7,5	
60.00 03 01	81 mm for ECO/PCI 05-
60.00 03 02	106 mm for ECO/PCI 04/06-
60.00 03 03	144 mm for ECO/PCI 07/08/09-
60.00 03 04	216 mm for ECO/PCI 10-
60.00 03 05	336 mm for ECO/PCI 11-

Set of hinges
set = 2 pcs.

Order No.	
60.00 04 07	to ECO/PCI 07- (small)
60.00 04 08	from ECO/PCI 08- (large)

Accessories

External fasteners
set = 4 pcs.

Order No. ***60.00 04 00***

Knurled screws
to clip on the lid screw as a hand turn lock
set = 4 pcs.

Order No. ***60.00 04 01***

Spacers
6 and 8 mm, plastic, for desired spacings between PCB's or mounting plates
set = 8 pcs.

Order No. ***60.00 04 02***

Double membrane cable glands
IP 66, with 2 integrated sealing membranes, interference fit without counter-nut, for wall thicknesses of 1.5 - 4.5 mm

Order No.		Sealing range (mm)
60.00 05 16	50 pcs. M 16	5 - 9
60.00 05 20	50 pcs. M 20	7 - 12
60.00 05 25	50 pcs. M 25	9 - 16
60.00 05 32	50 pcs. M 32	14- 21

Vent plugs
with labyrinth seal to prevent the formation of condensation; IP x 4; for wall thicknesses of 1.5 - 4.5 mm

Order No.	
60.00 04 20	100 pcs. M 20

Type: ***60.07 07 . .***

Type	Order No.	Dimensions	Weight	DIN rail length in mm	max. fitting length in mm	Mounting plate (thickness in mm)	External mounting brackets	External hinge* set	Knurled screw set	Spacers set = 8 pcs.
ECO 01-6	***60.07 07 11***	65 x 65 x 57	127 g							
PCI 01-6M	***60.07 07 15***	65 x 65 x 57	82 g							
ECO 01-8	***60.07 07 21***	65 x 65 x 81	117 g							
				TS 15						
				49.5	39.5	2.5	•	•	•	•

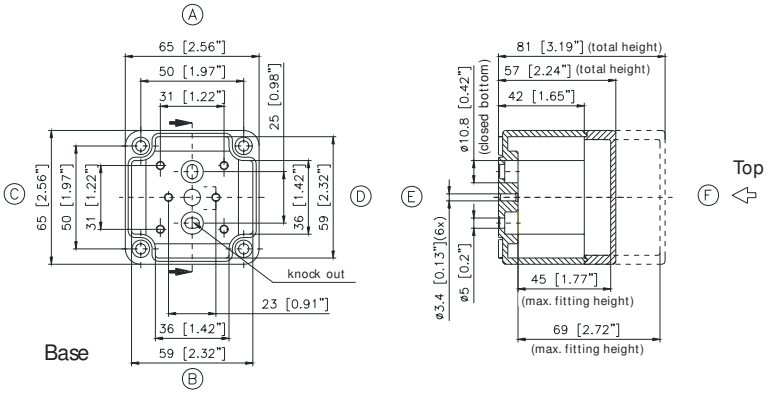

Maximum number of cable glands to ***50262****

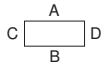

M	Corner dim.	Side A/B	Side C/D	***PG***	Corner dim.	Side A/B	Side C/D
ECO							
12	17.25	2	2	7	17.25	1	1
16	25.30	1	1	9	21.85	1	1
20	27.60	1	1	11	25.30	1	1
25	37.95			13.5	27.60	1	1
32	48.30			16	31.05	1	1
40	60.95			21	37.95		
50	69.00			29	48.30		
63	74.75			36	60.95		

PCI

Pre-embossing for enclosure version		Enclosure side			
PG	M	A	B	C	D
11/16		1	1	1	1
	16/20	1	1	1	1

Type: ***60.07 09 . .***

Type	Order No.	Dimensions	Weight	DIN rail length in mm	max. fitting length in mm	Mounting plate (thickness in mm)	External mounting brackets	External hinge* set	Knurled screw set	Spacers set = 8 pcs.
ECO 02-6	***60.07 09 11***	65 x 94 x 57	118 g							
PCI 02-6M	***60.07 09 15***	65 x 94 x 57	101 g							
ECO 02-8	***60.07 09 21***	65 x 94 x 81	144 g							
				TS 15						
				80	70	2.5	•	•	•	•

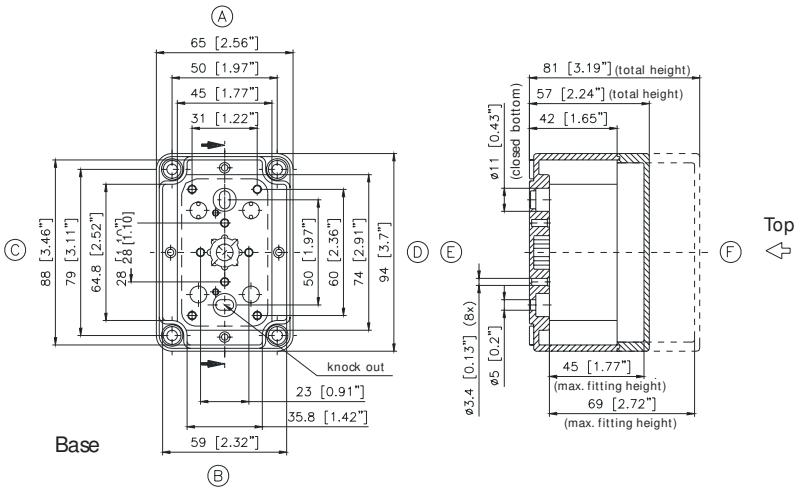

Maximum number of cable glands to ***50262****

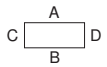

M	Corner dim.	Side A/B	Side C/D	***PG***	Corner dim.	Side A/B	Side C/D
ECO							
12	17.25	2	3	7	17.25	1	3
16	25.30	1	2	9	21.85	1	2
20	27.60	1	2	11	25.30	1	2
25	37.95			13.5	27.60	1	2
32	48.30			16	31.05	1	2
40	60.95			21	37.95		
50	69.00			29	48.30		
63	74.75			36	60.95		

PCI

Pre-embossing for enclosure version		Enclosure side			
PG	M	A	B	C	D
11/16		1	1	2	2
	16/20	1	1	2	2

* Please quote mounting side

Type: ***60.09 09 . .***

Type	Order No.	Dimensions	Weight	DIN rail length in mm	max. fitting length in mm	Mounting plate (thickness in mm)	External mounting brackets	External hinge* set	Knurled screw set	Spacers set = 8 pcs.
ECO 03-6	***60.09 09 11***	94 x 94 x 57	133 g							
PCI 03-6M	***60.09 09 15***	94 x 94 x 57	300 g							
ECO 03-8	***60.09 09 21***	94 x 94 x 81	300 g							
ECO 03-6t	***60.09 09 12***	94 x 94 x 57	300 g							
ECO 03-8t	***60.09 09 22***	94 x 94 x 81	192 g							
				TS 15						
				80	70	2.5	•	•	•	•

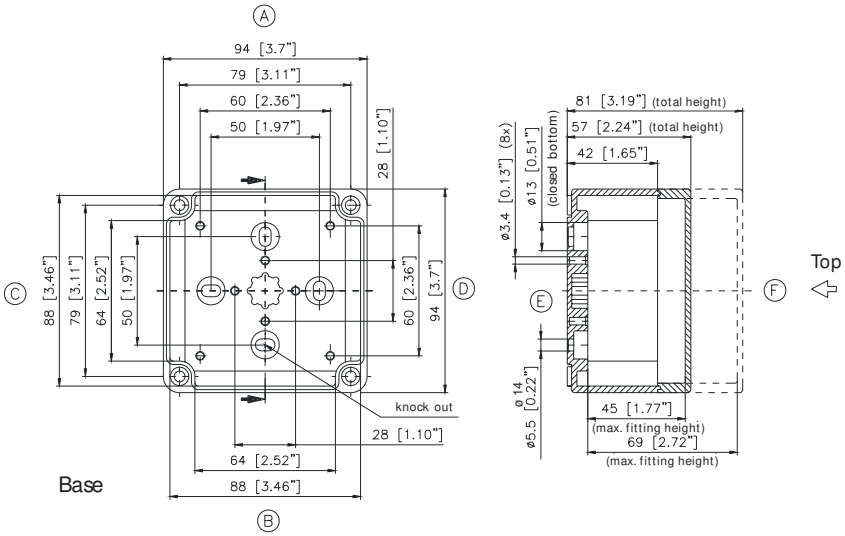

Maximum number of cable glands to ***50262****

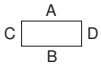

M	Corner dim.	Side A/B	Side C/D	***PG***	Corner dim.	Side A/B	Side C/D
ECO							
12	17.25	3	3	7	17.25	3	3
16	25.30	2	2	9	21.85	2	2
20	27.60	2	2	11	25.30	2	2
25	37.95			13.5	27.60	2	2
32	48.30			16	31.05	2	2
40	60.95			21	37.95		
50	69.00			29	48.30		
63	74.75			36	60.95		
PCI							

Pre-embossing for enclosure version		Enclosure side			
PG	M	A	B	C	D
11/16		2	1	2	2
	16/20	2	1	2	2

Type: ***60.09 13 . .***

Type	Order No.	Dimensions	Weight	DIN rail length in mm	max. fitting length in mm	Mounting plate (thickness in mm)	External mounting brackets	External hinge* set	Knurled screw set	Spacers set = 8 pcs.
ECO 04-6	***60.09 13 11***	94 x 130 x 57	210 g							
PCI 04-6M	***60.09 13 15***	94 x 130 x 57	153 g							
ECO 04-8	***60.09 13 21***	94 x 130 x 81	400 g							
ECO 04-6t	***60.09 13 12***	94 x 130 x 57	220 g							
ECO 04-8t	***60.09 13 22***	94 x 130 x 81	360 g							
				TS 15/35						
				106	96	2.5	•	•	•	•

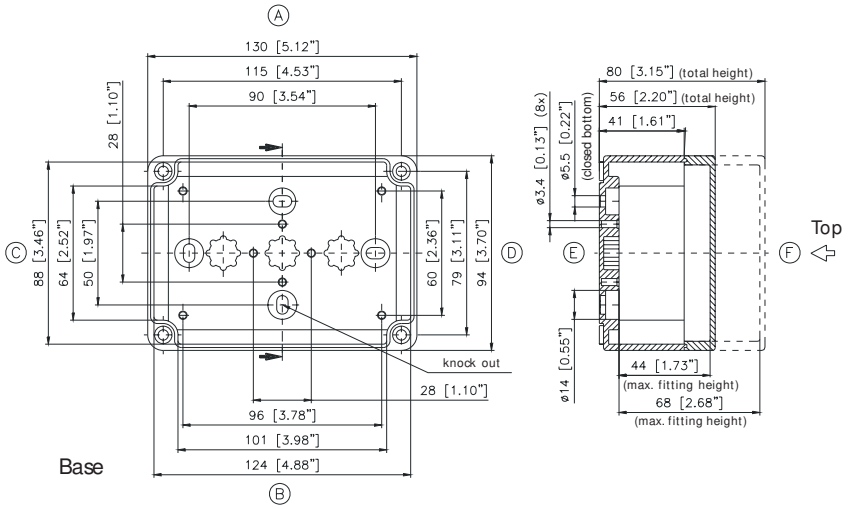

Maximum number of cable glands to ***50262****

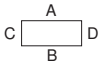

M	Corner dim.	Side A/B	Side C/D	***PG***	Corner dim.	Side A/B	Side C/D
ECO							
12	17.25	5	3	7	17.25	5	3
16	25.30	4	2	9	21.85	4	2
20	27.60	3	2	11	25.30	4	2
25	37.95			13,5	27.60	3	2
32	48.30			16	31.05	3	2
40	60.95			21	37.95		
50	69.00			29	48.30		
63	74.75			36	60.95		
PCI							

Pre-embossing for enclosure version		Enclosure side			
PG	M	A	B	C	D
11/16		3	3	2	2
	16/20	3	3	2	2

* Please quote mounting side

Type: ***60.11 11 . .***

Type	Order No.	Dimensions	Weight	DIN rail length in mm	max. fitting length in mm	Mounting plate (thickness in mm)	External mounting brackets	External hinge* set	Knurled screw set	Spacers set = 8 pcs.
ECO 05-7	***60.11 11 11***	110 x 110 x 66	360 g							
ECO 05-9	***60.11 11 21***	110 x 110 x 90	309 g							
PCI 05-9M	***60.11 11 15***	110 x 110 x 90	400 g							
ECO 05-7t	***60.11 11 12***	110 x 110 x 66	183 g							
ECO 05-9t	***60.11 11 22***	110 x 110 x 90	275 g							
				TS 15/35						
				92	82	2.5	•	•	•	•

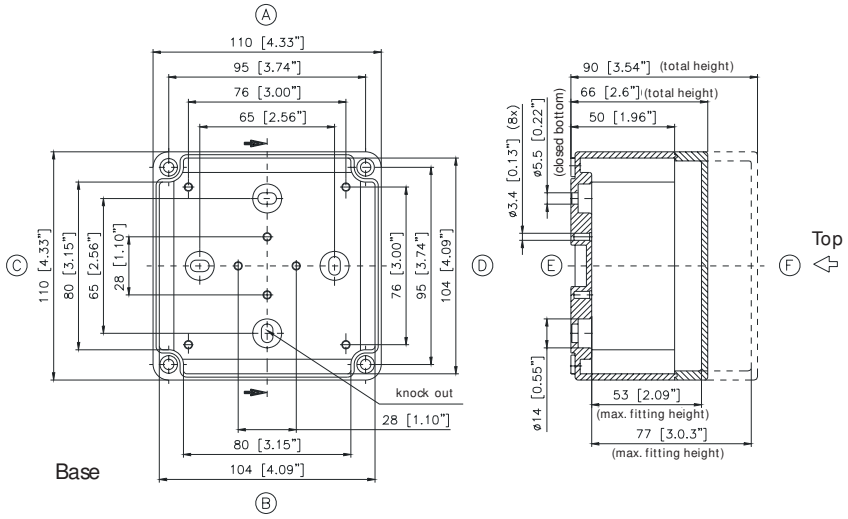

Maximum number of cable glands to ***50262****

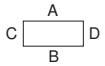

M	Corner dim.	Side A/B	Side C/D	***PG***	Corner dim.	Side A/B	Side C/D
ECO							
12	17.25	8	8	7	17.25	8	8
16	25.30	4	4	9	21.85	3	3
20	27.60	2	2	11	25.30	3	3
25	37.95	2	2	13.5	27.60	2	2
32	48.30	1	1	16	31.05	2	2
40	60.95			21	37.95	2	2
50	69.00			29	48.30		
63	74.75			36	60.95		

PCI

Pre-embossing for enclosure version		Enclosure side			
PG	M	A	B	C	D
16/21		2	1	2	2
	20/25	2	1	2	2

Type: ***60.13 13 . .***

Type	Order No.	Dimensions	Weight	DIN rail length in mm	max. fitting length in mm	Mounting plate (thickness in mm)	External mounting brackets	External hinge* set	Knurled screw set	Spacers set = 8 pcs.
ECO 06-7	***60.13 13 11***	130 x 130 x 75	330 g							
PCI 06-7M	***60.13 13 15***	130 x 130 x 75	227 g							
ECO 06-10	***60.13 13 21***	130 x 130 x 99	345 g							
ECO 06-7t	***60.13 13 12***	130 x 130 x 75	244 g							
ECO 06-10t	***60.13 13 22***	130 x 130 x 99	307 g							
				TS 15/35						
				106	96	2.5	•	•	•	•

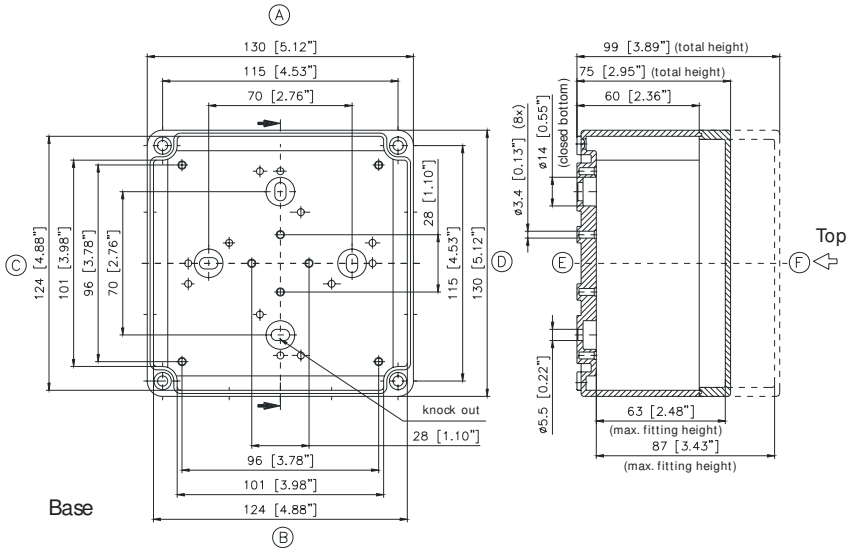

Maximum number of cable glands to ***50262****

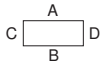

M	Corner dim.	Side A/B	Side C/D	***PG***	Corner dim.	Side A/B	Side C/D
ECO							
12	17.25	13	13	7	17.25	10	10
16	25.30	8	8	9	21.85	8	8
20	27.60	3	3	11	25.30	8	8
25	37.95	3	3	13.5	27.60	3	3
32	48.30	2	2	16	31.05	3	3
40	60.95	1	1	21	37.95	2	2
50	69.00			29	48.30	2	2
63	74.75			36	60.95		

PCI

Pre-embossing for enclosure version		Enclosure side			
PG	M	A	B	C	D
16/21		2	1	2	2
	20/25	2			
	20		3	3	3
	25/32	1			

* Please quote mounting side

Type: ***60.09 18 . .***

Type	Order No.	Dimensions	Weight	DIN rail length in mm	max. fitting length in mm	Mounting plate (thickness in mm)	External mounting brackets	External hinge* set	Knurled screw set	Spacers set = 8 pcs.
ECO 07-6	***60.09 18 11***	94 x 180 x 57	208 g							
PCI 07-6M	***60.09 18 15***	94 x 180 x 57	260 g							
ECO 07-8	***60.09 18 21***	94 x 180 x 81	425 g							
ECO 07-6t	***60.09 18 12***	94 x 180 x 57	217 g							
ECO 07-8t	***60.09 18 22***	94 x 180 x 81	340 g							
				TS 15						
				144	134	2.5	•	•	•	•

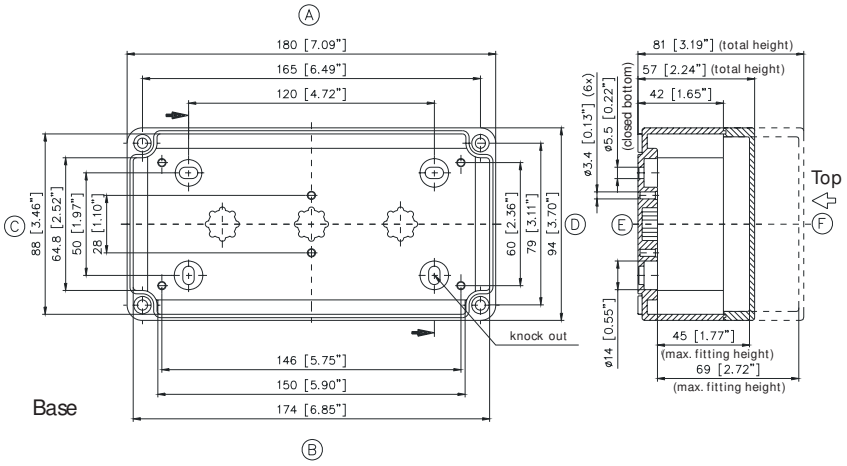

Maximum number of cable glands to ***50262****

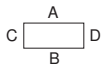

M	Corner dim.	Side A/B	Side C/D	***PG***	Corner dim.	Side A/B	Side C/D
ECO							
12	17.25	8	3	7	17.25	7	3
16	25.30	6	2	9	21.85	6	2
20	27.60	4	2	11	25.30	5	2
25	37.95			13.5	27.60	5	2
32	48.30			16	31.05	4	2
40	60.95			21	37.95		
50	69.00			29	48.30		
63	74.75			36	60.95		

PCI

Pre-embossing for enclosure version		Enclosure side			
PG	M	A	B	C	D
11/16		5	5	2	2
	16/20	5	5	2	2

Type: ***60.11 18 . .***

Type	Order No.	Dimensions	Weight	DIN rail length in mm	max. fitting length in mm	Mounting plate (thickness in mm)	External mounting brackets	External hinge* set	Knurled screw set	Spacers set = 8 pcs.
ECO 08-9	***60.11 18 11***	110 x 180 x 90	396 g							
PCI 08-9M	***60.11 18 15***	110 x 180 x 90	340 g							
ECO 08-11	***60.11 18 21***	110 x 180 x 111	524 g							
PCI 08-11M	***60.11 18 25***	110 x 180 x 111	358 g							
ECO 08-9t	***60.11 18 12***	110 x 180 x 90	340 g							
ECO 08-11t	***60.11 18 22***	110 x 180 x 111	384 g							
				TS 35						
				144	134	2.5	•	•	•	•

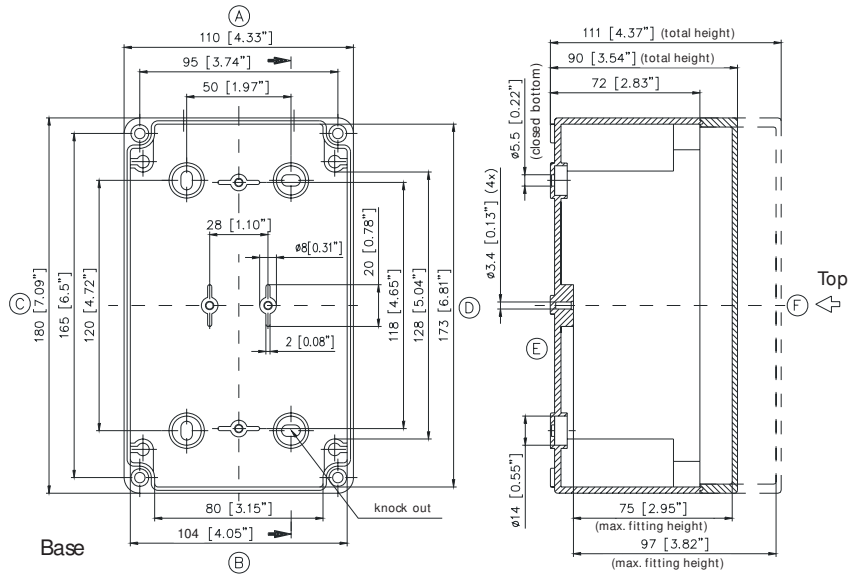

Maximum number of cable glands to ***50262****

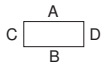

M	Corner dim.	Side A/B	Side C/D	***PG***	Corner dim.	Side A/B	Side C/D
ECO							
12	17.25	12	18	7	17.25	12	18
16	25.30	6	10	9	21.85	6	10
20	27.60	5	8	11	25.30	6	10
25	37.95	5	3	13.5	27.60	6	8
32	48.30	2	3	16	31.05	4	8
40	60.95	1	2	21	37.95	2	3
50	69.00	1	1	29	48.30	1	2
63	74.75			36	60.95	1	1

PCI

Pre-embossing for enclosure version		Enclosure side			
PG	M	A	B	C	D
16		4	4	4	4
16/21		1	1		
21/29				1	1
	20	4	4	4	4
	20/25	1	1		
	32/40			1	1

* Please quote mounting side

Type: ***60.18 18 . .***

Type	Order No.	Dimensions	Weight	DIN rail length in mm	max. fitting length in mm	Mounting plate (thickness in mm)	External mounting brackets	External hinge* set	Knurled screw set	Spacers set = 8 pcs.
ECO 09-9	***60.18 18 11***	180 x 182 x 90	670 g							
PCI 09-9M	***60.18 18 15***	180 x 182 x 90	454 g							
ECO 09-11	***60.18 18 21***	180 x 182 x 111	712 g							
PCI 09-11M	***60.18 18 25***	180 x 182 x 111	550 g							
ECO 09-16	***60.18 18 31***	180 x 182 x 165	940 g							
ECO 09-9t	***60.18 18 12***	180 x 182 x 90	467 g							
ECO 09-11t	***60.18 18 22***	180 x 182 x 111	529 g							
ECO 09-16t	***60.18 18 32***	180 x 182 x 165	692 g							
				TS 35						
				144	134	2.5	•	•	•	•

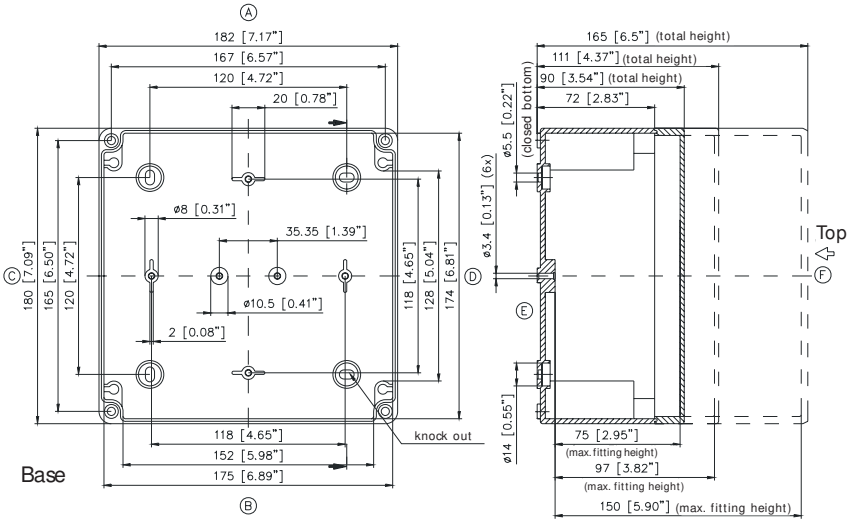

Maximum number of cable glands to ***50262****

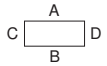

M	Corner dim.	Side A/B	Side C/D	***PG***	Corner dim.	Side A/B	Side C/D
ECO							
12	17.25	21	18	7	17.25	21	18
16	25.30	11	9	9	21.85	12	10
20	27.60	9	7	11	25.30	12	10
25	37.95	7	5	13,5	27.60	10	8
32	48.30	3	3	16	31.05	10	8
40	60.95	3	2	21	37.95	4	3
50	69.00	2	1	29	48.30	3	2
63	74.75			36	60.95	2	2

PCI

Pre-embossing for enclosure version		Enclosure side			
PG	M	A	B	C	D
16		8	8	4	4
21/29		1	1	1	1
	20	8	8	4	4
	32/40	1	1	1	1

Type: ***60.25 36 . .***

Type	Order No.	Dimensions	Weight	DIN rail length in mm	max. fitting length in mm	Mounting plate (thickness in mm)	External mounting brackets	External hinge* set	Knurled screw set	Spacers set = 8 pcs.
ECO 11-11	***60.25 36 11***	254 x 361 x 111	1390 g							
PCI 11-11M	***60.25 36 15***	254 x 361 x 111	1130 g							
ECO 11-16	***60.25 36 21***	254 x 361 x 165	1423 g							
ECO 11-11t	***60.25 36 12***	254 x 361 x 111	1185 g							
ECO 11-16t	***60.25 36 22***	254 x 361 x 165	1960 g							
				TS 15						
				336	326	2.5	•	•	•	•

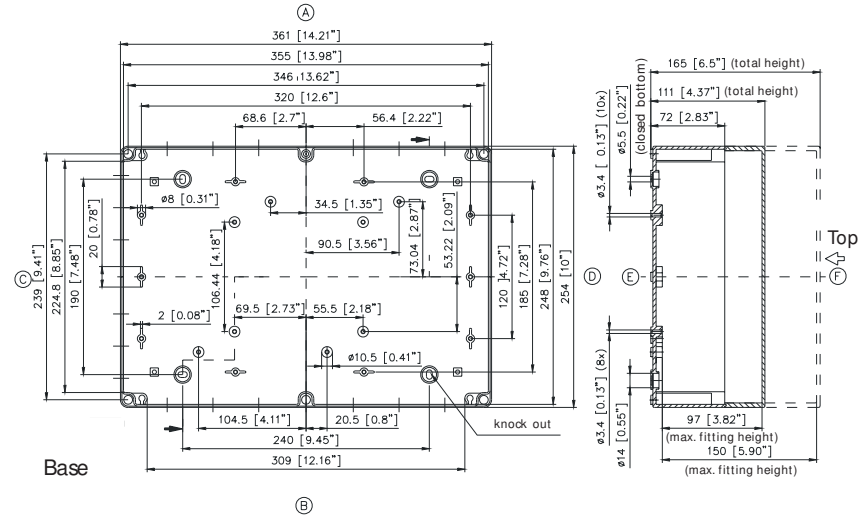

Maximum number of cable glands to ***50262****

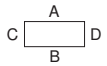

M	Corner dim.	Side A/B	Side C/D	***PG***	Corner dim.	Side A/B	Side C/D
ECO							
12	17.25	42	33	7	17.25	42	33
16	25.30	24	18	9	21.85	24	20
20	27.60	18	15	11	25.30	24	18
25	37.95	14	11	13.5	27.60	20	16
32	48.30	6	5	16	31.05	16	14
40	60.95	4	4	21	37.95	8	6
50	69.00	4	3	29	48.30	6	4
63	74.75			36	60.95	4	3

PCI

Pre-embossing for enclosure version		Enclosure side			
PG	M	A	B	C	D
16		8	8	8	8
16/21				2	2
21/29		2	2	1	1
	20	8	8	8	8
	25/32			2	2
	32/40	2	2	1	1

* Please quote mounting side

Type: ***60.18 25 . .***

Type	Order No.	Dimensions	Weight	DIN rail length in mm	max. fitting length in mm	Mounting plate (thickness in mm)	External mounting brackets	External hinge* set	Knurled screw set	Spacers set = 8 pcs.
ECO 10-6	***60.18 25 10***	180 x 254 x 63	640 g							
PCI 10-6M	***60.18 25 05***	180 x 254 x 63	640 g							
ECO 10-9	***60.18 25 11***	180 x 254 x 90	840 g							
PCI 10-9M	***60.18 25 15***	180 x 254 x 90	850 g							
ECO 10-11	***60.18 25 21***	180 x 254 x 111	942 g							
PCI 10-11M	***60.18 25 25***	180 x 254 x 111	810 g							
ECO 10-16	***60.18 25 31***	180 x 254 x 165	1250 g							
ECO 10-6t	***60.18 25 09***	180 x 254 x 63	640 g	TS 35						
ECO 10-9t	***60.18 25 12***	180 x 254 x 90	622 g	216	206	2.5	•	•	•	•
ECO 10-11t	***60.18 25 22***	180 x 254 x 111	681 g							
ECO 10-16t	***60.18 25 32***	180 x 254 x 165	1250 g							

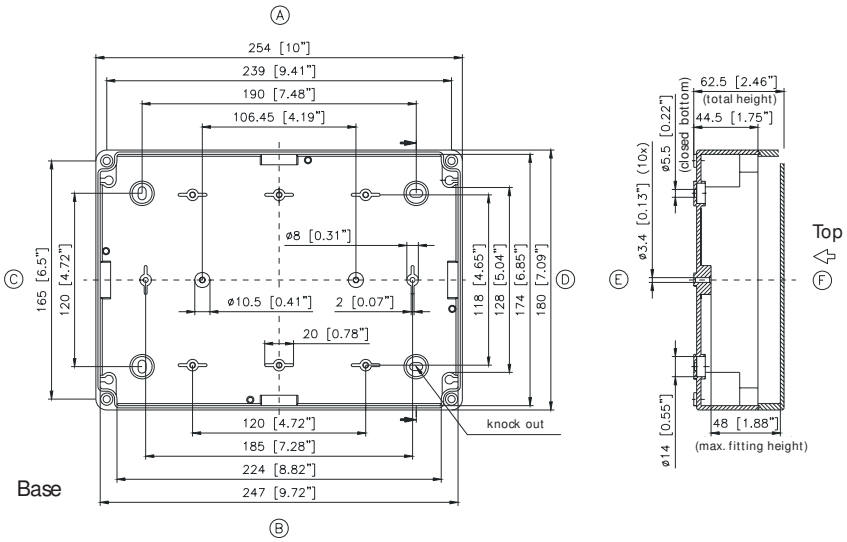

Maximum number of cable glands to ***50262****

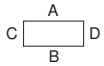

Values apply to lowest construction height

M	Corner dim.	Side A/B	Side C/D	***PG***	Corner dim.	Side A/B	Side C/D
ECO							
12	17.25	5	3	7	17.25	5	3
16	25.30	4	2	9	21.85	4	2
20	27.60	3	2	11	25.30	4	2
25	37.95			13.5	27.60	3	2
32	48.30			16	31.05	3	2
40	60.95			21	37.95		
50	69.00			29	48.30		
63	74.75			36	60.95		

PCI

Pre-embossing for enclosure version		Enclosure side			
PG	M	A	B	C	D
PCI 10-6					
	16/20	6	6	2	2
	25/32	1	1	1	1
PCI 10-9, 10-11					
16		8	8	4	4
16/21		2	2		
21/29		1	1	1	1
	20	8	8	4	4
	25/32	2	2		
	32/40	1	1	1	1

* Please quote mounting side