Chipsmall Limited consists of a professional team with an average of over 10 year of expertise in the distribution of electronic components. Based in Hongkong, we have already established firm and mutual-benefit business relationships with customers from,Europe,America and south Asia,supplying obsolete and hard-to-find components to meet their specific needs.

With the principle of “Quality Parts,Customers Priority,Honest Operation,and Considerate Service”,our business mainly focus on the distribution of electronic components. Line cards we deal with include Microchip,ALPS,ROHM,Xilinx,Pulse,ON,Everlight and Freescale. Main products comprise IC,Modules,Potentiometer,IC Socket,Relay,Connector.Our parts cover such applications as commercial,industrial, and automotives areas.

We are looking forward to setting up business relationship with you and hope to provide you with the best service and solution. Let us make a better world for our industry!

Contact us

Tel: +86-755-8981 8866 Fax: +86-755-8427 6832
Email & Skype: info@chipsmall.com Web: www.chipsmall.com
Address: A1208, Overseas Decoration Building, #122 Zhenhua RD., Futian, Shenzhen, China

THIS DRAWING IS UNPUBLISHED. RELEASED FOR PUBLICATION 20
© COPYRIGHT 20 BY TYCO ELECTRONICS CORPORATION. ALL RIGHTS RESERVED.

LOC	DIST
AA	22

REVISIONS

P	LTR	DESCRIPTION	DATE	DWN	APVD
	B	ECO-07-022186	20SEPT07	LAM	JW
	B1	**REVISED PER ECO-10-000445**	**11JAN10**	**KK**	**AEG**

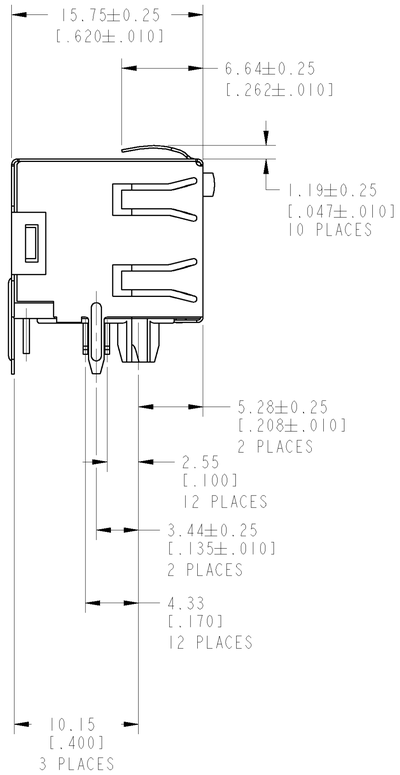

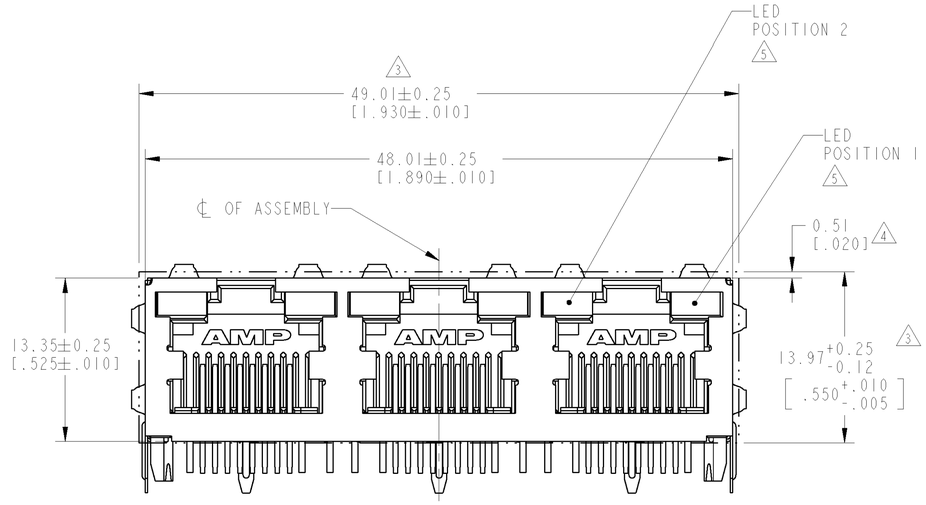

1. MATERIAL: HOUSING - THERMOPLASTIC, BLACK, UL94V-0
   TERMINALS - .36[.014] THICK PHOSPHOR BRONZE PLATED WITH 3.81µm [.000150] MINIMUM THICK MATTE TIN IN SOLDER AREA, 1.27µm [.000050] MINIMUM GOLD IN LOCALIZED PLATE AREA. ENTIRE TERMINAL PLATED WITH 1.27µm [.000050] MINIMUM THICK NICKEL
   SHIELD - 0.196[.0077] THICK COPPER ZINC ALLOY, PREPLATED WITH 1.27µm [.000050] MINIMUM SATIN NICKEL WITH 2.03µm [.000080] MINIMUM TIN POST DIPPED ON PCB TABS
   LIGHT EMITTING DIODE (LED) - DIFFUSED EPOXY LENS 0.51 X 0.51 [.020 X .020] CARBON STEEL WIREFRAME LEADS PREPLATED WITH 1.02 µm [.000040] THICK Cu UNDERPLATE WITH 7.62 µm [.000300] THICK Sn OVER 2.03 µm [.000080] Ag OVER 1.02 µm [.000040] THICK Cu OVER 3.56 µm [.000140] THICK NICKEL
2. JACK CAVITY CONFORMS TO FCC RULES AND REGULATIONS PART 68, SUBPART F

3 SUGGESTED PANEL OPENING DIMENSIONS

4 SUGGESTED CLEARANCE BETWEEN TOP OF CONNECTOR AND TOP OF PANEL OPENING

5 SEE TABLE FOR COLOR OF LEDS AND NUMBER REQUIRED

6. THIS MODULAR JACK WITH INTEREATED LED IS NOT IR REFLOW SOLDERING PROCESS COMPATIBLE

7 OBSOLETE PARTS: OBSOLETE CIS STREAMLINING PER D.RENAUD/D.SINISI

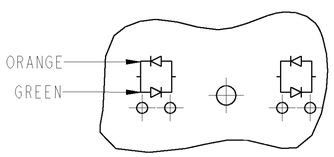

LED CURRENT DIAGRAM
7 ~~6116132-7~~ ONLY

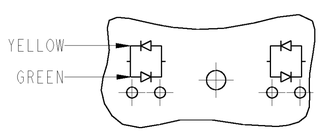

LED CURRENT DIAGRAM
6116132-8 ONLY

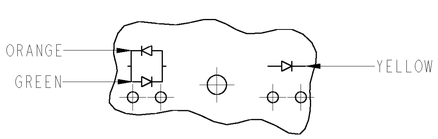

LED CURRENT DIAGRAM
~~6116132-9~~ ONLY
7

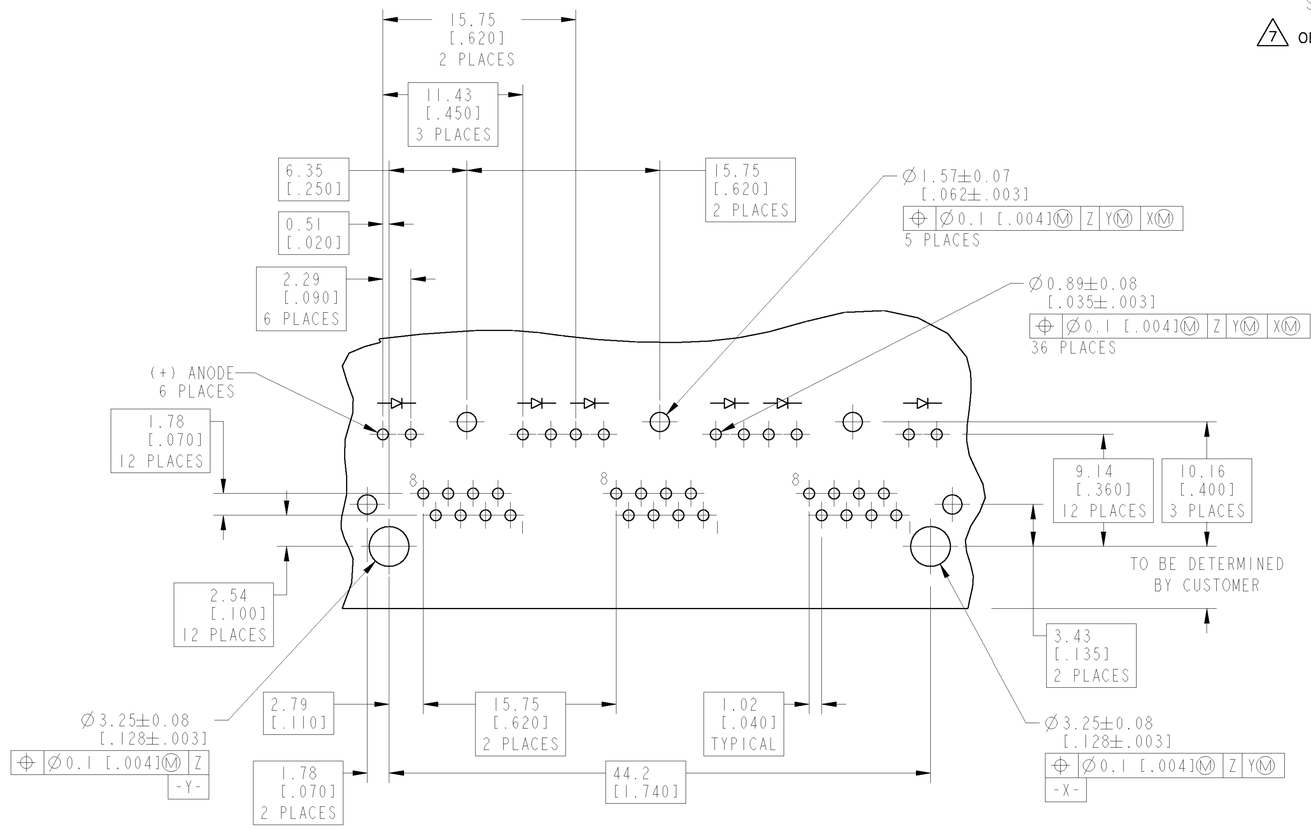

SUGGESTED P.C.B. LAYOUT
(COMPONENT SIDE)

	INDICATOR COLOR		PART NUMBER
7 OBSOLETE	ORANGE/GREEN	YELLOW	~~6116132-9~~
	YELLOW/GREEN	YELLOW/GREEN	6116132-8
OBSOLETE 7	ORANGE/GREEN	ORANGE/GREEN	~~6116132-7~~
	YELLOW	YELLOW	~~6116132-6~~
	GREEN	GREEN	6116132-5
	GREEN	YELLOW	6116132-4
7 OBSOLETE	YELLOW	-	~~6116132-3~~
	-	GREEN	6116132-2
	YELLOW	GREEN	6116132-1
	POSITION 2	POSITION 1	

THIS DRAWING IS A CONTROLLED DOCUMENT FOR TYCO ELECTRONICS CORPORATION. IT IS SUBJECT TO CHANGE AND THE CONTROLLING ENGINEERING ORGANIZATION SHOULD BE CONTACTED FOR THE LATEST REVISION.

DWN	08JUNE2005 D. J. AHERON/L. A. MAYER	tyco Electronics — Tyco Electronics, Harrisburg, PA 17105-3608
CHK	08JUNE2005 J. WESTMAN	
APVD	08JUNE2005 S.FLICKINGER	NAME: INVERTED MODULAR JACK ASSEMBLY, 1 X 3, SHIELDED, PANEL GROUND TABS, LED
PRODUCT SPEC	108-1163-4	
APPLICATION SPEC	114-2154	
WEIGHT	-	

DIMENSIONS: mm [INCH]

TOLERANCES UNLESS OTHERWISE SPECIFIED:
0 PLC ±-
1 PLC ±-
2 PLC ±-
3 PLC ±.125 [.005]
4 PLC ±-
ANGLES ±-

MATERIAL: SEE NOTE 1
FINISH: SEE NOTE 1

SIZE	CAGE CODE	DRAWING NO	RESTRICTED TO
A1	00779	C-6116132	-

CUSTOMER DRAWING — SCALE 4:1 — SHEET 1 OF 1 — REV **B1**