Chipsmall Limited consists of a professional team with an average of over 10 year of expertise in the distribution of electronic components. Based in Hongkong, we have already established firm and mutual-benefit business relationships with customers from,Europe,America and south Asia,supplying obsolete and hard-to-find components to meet their specific needs.

With the principle of “Quality Parts,Customers Priority,Honest Operation,and Considerate Service”,our business mainly focus on the distribution of electronic components. Line cards we deal with include Microchip,ALPS,ROHM,Xilinx,Pulse,ON,Everlight and Freescale. Main products comprise IC,Modules,Potentiometer,IC Socket,Relay,Connector.Our parts cover such applications as commercial,industrial, and automotives areas.

We are looking forward to setting up business relationship with you and hope to provide you with the best service and solution. Let us make a better world for our industry!

Contact us

Tel: +86-755-8981 8866 Fax: +86-755-8427 6832
Email & Skype: info@chipsmall.com Web: www.chipsmall.com
Address: A1208, Overseas Decoration Building, #122 Zhenhua RD., Futian, Shenzhen, China

THIS DRAWING IS UNPUBLISHED. RELEASED FOR PUBLICATION -,- .
© COPYRIGHT - By - ALL RIGHTS RESERVED.

LOC	DIST
AA	00

REVISIONS

P	LTR	DESCRIPTION	DATE	DWN	APVD
	E	REV PER ECO-13-000217	31DEC2012	DZ	AC

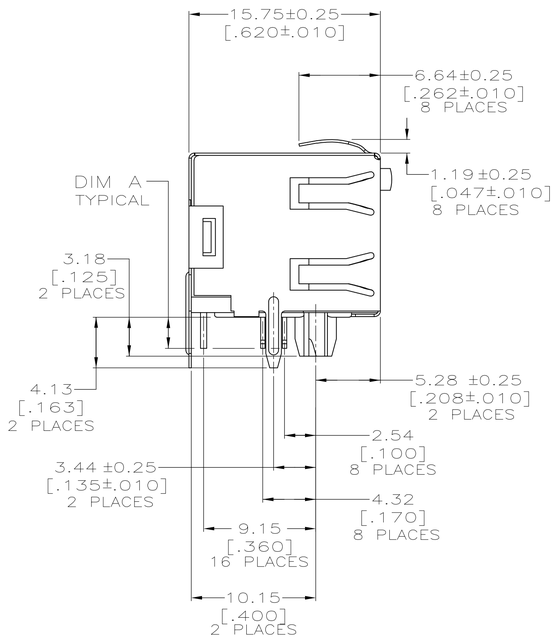

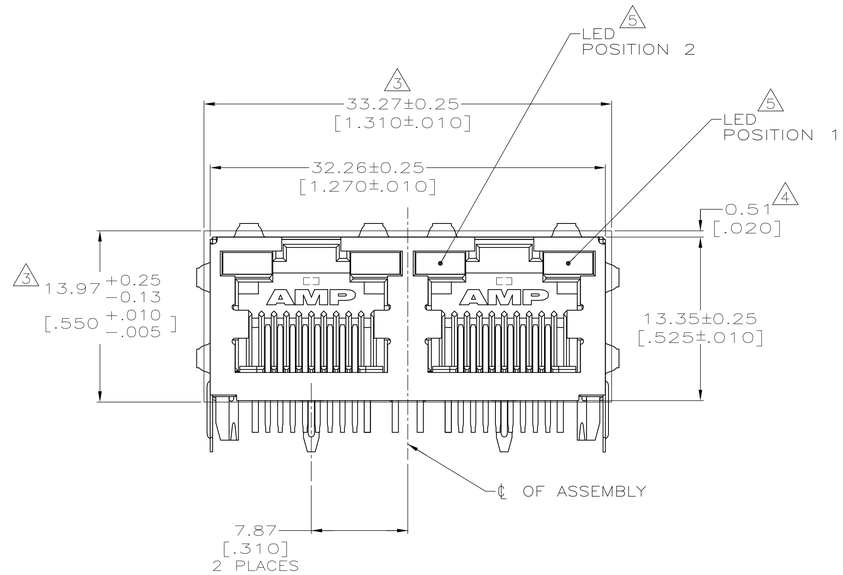

1 MATERIAL:
HOUSING – HIGH TEMPERATURE THERMOPLASTIC, BLACK, UL94V-0.
TERMINALS – 0.36[.014] THICK PHOS BRONZE PLATED WITH 3.81μm[.000150] MINIMUM THICK MATTE TIN IN SOLDER AREA. 1.27μm [.000050] MINIMUM GOLD IN LOCALIZED PLATE AREA. ENTIRE TERMINAL PLATED WITH 1.27μm [.000050] MINIMUM THICK NICKEL.
SHIELD – 0.196[.0077] THICK COPPER ZINC ALLOY PREPLATED WITH 1.27 μm[.000050] MINIMUM SATIN NICKEL WITH 2.03μm[.000080] MINIMUM TIN POST DIPPED ON PCB GROUND TABS.
LIGHT EMITTING DIODE (LED) – DIFFUSED EPOXY LENS, 0.51 x 0.51[.020 x .020] CARBON STEEL WIREFRAME LEADS PREPLATED WITH 8.89 μm THICK Sn/Cu OVER 2.03 μm THICK Ag OVER 1.02 μm THICK Cu OVER 3.56 μm THICK Ni OVER 1.02 μm THICK Cu UNDERPLATE

2. JACK CAVITY CONFORMS TO FCC RULES AND REGULATIIONS PART 68, SUBPART F.

3 SUGGESTED PANEL OPENING DIMENSIONS.

4 SUGGESTED CLEARANCE BETWEEN TOP OF CONNECTOR AND TOP PANEL OPENING.

5 SEE TABLE FOR COLOR OF LEDS AND NUMBER REQUIRED.

6. THIS MODULAR JACK WITH INTEGRATED LED IS NOT IR REFLOW SOLDERING PROCESS COMPATIBLE.

7 OBSOLETE PARTS: OBSOLETE CIS STREAMLINING PER D.RENAUD/D.SINISI

8 TAPE & REEL PACKAGING, FULLY ESD COMPLIANCE.

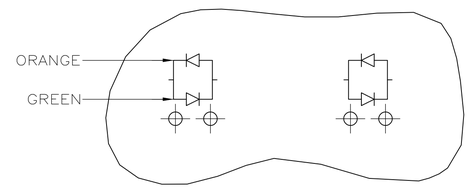

LED CURRENT DIAGRAM
6116353-7 ONLY

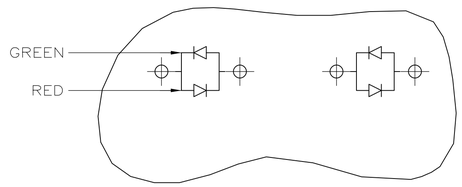

LED CURRENT DIAGRAM
1-6116353-3 & 2-6116353-9
ONLY

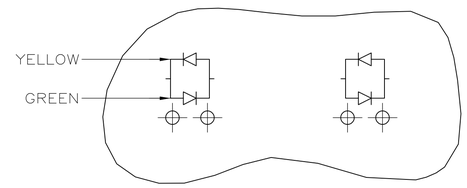

LED CURRENT DIAGRAM
6116353-8 ONLY

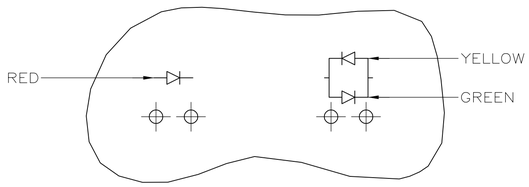

LED CURRENT DIAGRAM
2-6116353-3 ONLY

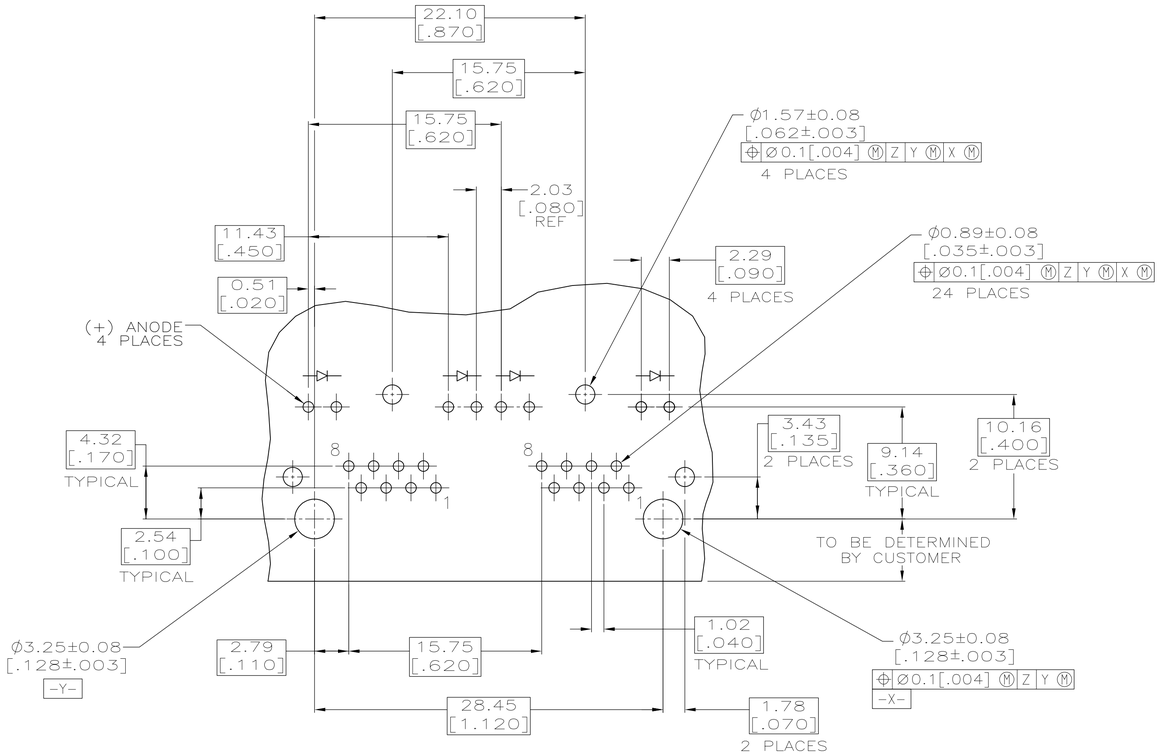

SUGGESTED PRINTED CIRCUIT BOARD LAYOUT
(COMPONENT SIDE)

	SOLDERTAIL LENGTH, DIM A	POSITION 2	POSITION 1	PART NUMBER
		INDICATOR COLOR FOR EACH HOUSING		
8	2.54 [.100]	YELLOW	GREEN	3-6116353-2
	3.05 [.120]	YELLOW	GREEN	3-6116353-1
	3.55 [.140]	RED/GREEN	RED/GREEN	2-6116353-9
	3.05 [.120]	YELLOW/GREEN	YELLOW/GREEN	2-6116353-8
	3.05 [.120]	GREEN	GREEN	2-6116353-4
7	2.54 [.100]	RED	YELLOW/GREEN	~~2-6116353-3~~
	2.54 [.100]	RED/GREEN	RED/GREEN	1-6116353-3
	3.55 [.140]	YELLOW	GREEN	6116353-9
	2.54 [.100]	YELLOW/GREEN	YELLOW/GREEN	6116353-8
7	2.54 [.100]	ORANGE/GREEN	ORANGE/GREEN	~~6116353-7~~
7	2.54 [.100]	YELLOW	YELLOW	~~6116353-6~~
	2.54 [.100]	GREEN	GREEN	6116353-5
	2.54 [.100]	GREEN	YELLOW	6116353-4
7	2.54 [.100]	YELLOW	–	~~6116353-3~~
	2.54 [.100]	–	GREEN	6116353-2
	2.54 [.100]	YELLOW	GREEN	6116353-1

THIS DRAWING IS A CONTROLLED DOCUMENT.

DIMENSIONS: mm

TOLERANCES UNLESS OTHERWISE SPECIFIED:
0 PLC ± –
1 PLC ± –
2 PLC ± 0.25[.01]
3 PLC ± 0.13[.005]
4 PLC ± –
ANGLES ± –

MATERIAL: SEE NOTE 1
FINISH: SEE NOTE 1

DWN 20APR2005 DL DRUMMOND/L.A.MAYER
CHK 20APR2005 J.WESTMAN
APVD 20APR2005 S.FLICKINGER
PRODUCT SPEC 108-1163-4
APPLICATION SPEC 114-2154
WEIGHT –

TE Connectivity

NAME: INVERTED MODULAR JACK ASSEMBLY, 1X2, SHIELDED, PANEL GROUND, WITH LEDS

SIZE	CAGE CODE	DRAWING NO	RESTRICTED TO
A1	00779	C-6116353	–

CUSTOMER DRAWING

SCALE	SHEET	REV
4:1	1 OF 1	E

4805 (3/11)