Chipsmall Limited consists of a professional team with an average of over 10 year of expertise in the distribution of electronic components. Based in Hongkong, we have already established firm and mutual-benefit business relationships with customers from,Europe,America and south Asia,supplying obsolete and hard-to-find components to meet their specific needs.

With the principle of “Quality Parts,Customers Priority,Honest Operation,and Considerate Service”,our business mainly focus on the distribution of electronic components. Line cards we deal with include Microchip,ALPS,ROHM,Xilinx,Pulse,ON,Everlight and Freescale. Main products comprise IC,Modules,Potentiometer,IC Socket,Relay,Connector.Our parts cover such applications as commercial,industrial, and automotives areas.

We are looking forward to setting up business relationship with you and hope to provide you with the best service and solution. Let us make a better world for our industry!

Contact us

Tel: +86-755-8981 8866 Fax: +86-755-8427 6832
Email & Skype: info@chipsmall.com Web: www.chipsmall.com
Address: A1208, Overseas Decoration Building, #122 Zhenhua RD., Futian, Shenzhen, China

THIS DRAWING IS UNPUBLISHED. RELEASED FOR PUBLICATION -,- .
© COPYRIGHT - BY TYCO ELECTRONICS CORPORATION. ALL INTERNATIONAL RIGHTS RESERVED.

LOC	DIST
AF	50

REVISIONS

P	LTR	DESCRIPTION	DATE	DWN	APVD
	A1	REVISED PER ECO-09-022244	08OCT09	HMR	MS

△1 USE SLUG BLADE IN APPLICATOR AS FOLLOWS:

"A"	SLUG BLADE
14.68[.578]	9.19[.362]
21.90[.862]	1.98[.078]

2 WIRE SIZE 20-18 A.W.G.

3 INSULATION RANGE: .065-.080

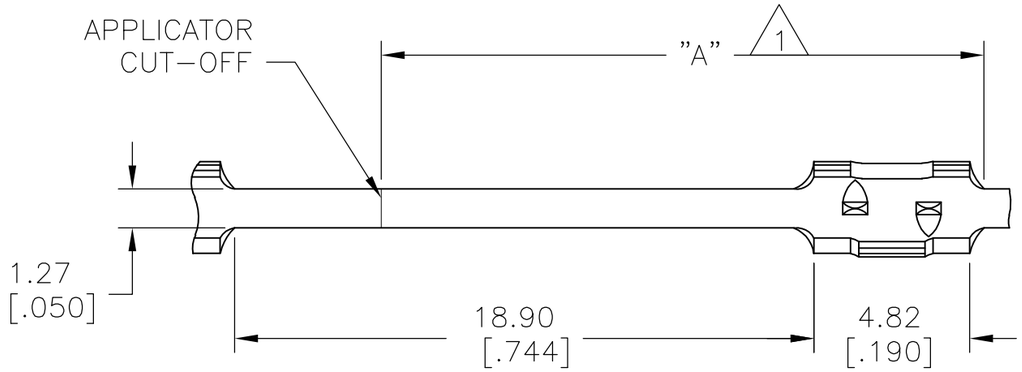

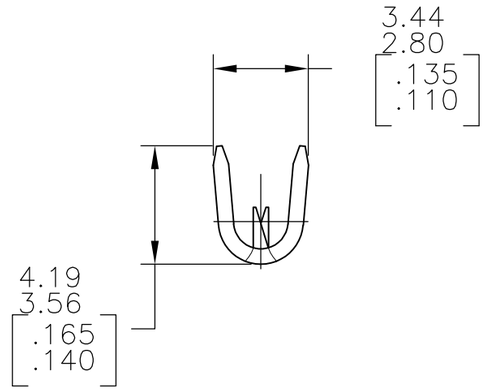

61248-1

PART NO

THIS DRAWING IS A CONTROLLED DOCUMENT.

DIMENSIONS: mm [INCHES]

TOLERANCES UNLESS OTHERWISE SPECIFIED:

0 PLC	± -
1 PLC	± -
2 PLC	± -
3 PLC	± 0.38[.015]
4 PLC	± -
ANGLES	± 1° 0'

MATERIAL: BRASS

FINISH: TIN

DWN RAGHAVENDRA 08OCT09
CHK M STRECKEWALD 08OCT09
APVD M STRECKEWALD 08OCT09
PRODUCT SPEC —
APPLICATION SPEC —
WEIGHT —

CUSTOMER DRAWING

Tyco Electronics

Tyco Electronics Corporation
Harrisburg, PA 17105-3608

NAME: TAB - INSULATION PIERCING

SIZE	CAGE CODE	DRAWING NO	RESTRICTED TO
A3	00779	C-61248	—

SCALE	SHEET	REV
5:1	1 OF 1	A1

1470-19 (1/08)