Chipsmall Limited consists of a professional team with an average of over 10 year of expertise in the distribution of electronic components. Based in Hongkong, we have already established firm and mutual-benefit business relationships with customers from,Europe,America and south Asia,supplying obsolete and hard-to-find components to meet their specific needs.

With the principle of “Quality Parts,Customers Priority,Honest Operation,and Considerate Service”,our business mainly focus on the distribution of electronic components. Line cards we deal with include Microchip,ALPS,ROHM,Xilinx,Pulse,ON,Everlight and Freescale. Main products comprise IC,Modules,Potentiometer,IC Socket,Relay,Connector.Our parts cover such applications as commercial,industrial, and automotives areas.

We are looking forward to setting up business relationship with you and hope to provide you with the best service and solution. Let us make a better world for our industry!

Contact us

Tel: +86-755-8981 8866 Fax: +86-755-8427 6832
Email & Skype: info@chipsmall.com Web: www.chipsmall.com
Address: A1208, Overseas Decoration Building, #122 Zhenhua RD., Futian, Shenzhen, China

THIS DRAWING IS UNPUBLISHED. RELEASED FOR PUBLICATION 2008
© COPYRIGHT 2008 BY TYCO ELECTRONICS CORPORATION. ALL RIGHTS RESERVED.

LOC	DIST
IS	–

REVISIONS

P	LTR	DESCRIPTION	DATE	DWN	APVD
	A2	Nominal stroke position changed	20APR2009	MS	DB
	B	New springs and RF performance improvement	22SEP2009	MS	DB
	C	Floating center conductor-conical outer interface	12NOV2009	MS	DB
	C1	Distance at nominal stroke position	17DEC2009	MS	MG

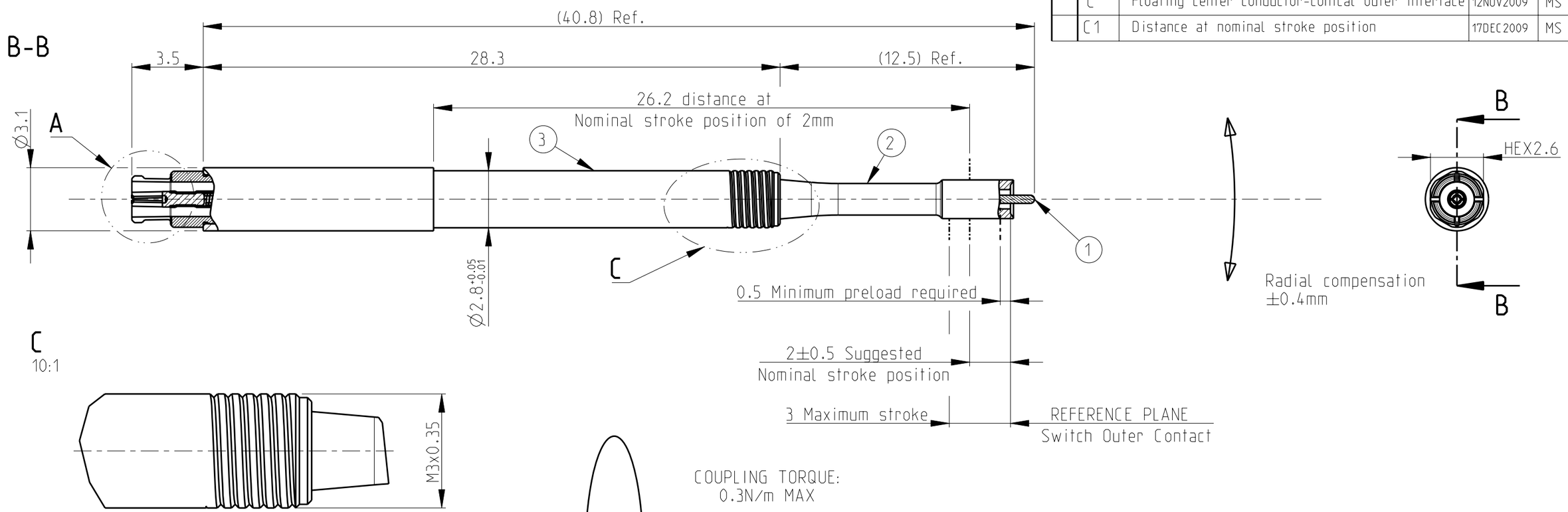

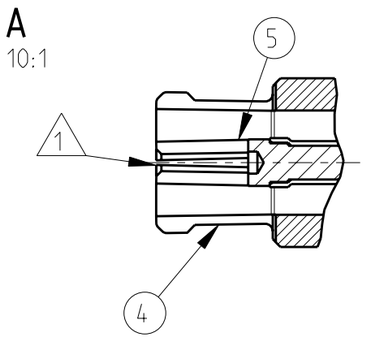

TE P/N	ITEM NO.	PIECES	DESCRIPTION	MATERIAL	PLATING
619361-1	5	1	CENTER CONTACT	BeCu	Au over NiP
	4	1	OUTER CONTACT	BeCu	Au over NiP
	3	1	OUTER SHELL	BRASS	Au over NiP
	2	1	FLOATING SHELL	BRASS	Au over NiP
	1	1	CENTER CONTACT PIN	BeCu	Au over NiP

1. SNAP FIT CONNECTORS SMPM: Interface according to MIL-STD-348.

2) PROBE IMPEDANCE: 50Ω ± 5%

3. General Tolerances ISO 2768-mK

THIS DRAWING IS A CONTROLLED DOCUMENT FOR TYCO ELECTRONICS CORPORATION. IT IS SUBJECT TO CHANGE AND THE CONTROLLING ENGINEERING ORGANIZATION SHOULD BE CONTACTED FOR THE LATEST REVISION.

DIMENSIONS: mm

TOLERANCES UNLESS OTHERWISE SPECIFIED: 3
0 PLC ±-
1 PLC ±-
2 PLC ±-
3 PLC ±-
4 PLC ±-
ANGLES ±2°

MATERIAL See table

FINISH See table

DWN M.Scheggia 29APR2008
CHK D.Bozzer 29APR2008
APVD –
PRODUCT SPEC 108-71086
APPLICATION SPEC –
WEIGHT –

Tyco Electronics
Tyco Electronics
Lugano - Switzerland

NAME Mass Production Test probe
Pico switch
–

SIZE	CAGE CODE	DRAWING NO	RESTRICTED TO
A3	00779	C-619361	–

CUSTOMER DRAWING

SCALE 5:1 SHEET 1 OF 1 REV C1