Chipsmall Limited consists of a professional team with an average of over 10 year of expertise in the distribution of electronic components. Based in Hongkong, we have already established firm and mutual-benefit business relationships with customers from,Europe,America and south Asia,supplying obsolete and hard-to-find components to meet their specific needs.

With the principle of “Quality Parts,Customers Priority,Honest Operation,and Considerate Service”,our business mainly focus on the distribution of electronic components. Line cards we deal with include Microchip,ALPS,ROHM,Xilinx,Pulse,ON,Everlight and Freescale. Main products comprise IC,Modules,Potentiometer,IC Socket,Relay,Connector.Our parts cover such applications as commercial,industrial, and automotives areas.

We are looking forward to setting up business relationship with you and hope to provide you with the best service and solution. Let us make a better world for our industry!

Contact us

Tel: +86-755-8981 8866 Fax: +86-755-8427 6832
Email & Skype: info@chipsmall.com Web: www.chipsmall.com
Address: A1208, Overseas Decoration Building, #122 Zhenhua RD., Futian, Shenzhen, China

LOC	DIST
IS	-

REVISIONS

P	LTR	DESCRIPTION	DATE	DWN	APVD
	51	First issue	03MAY2010	MS	MG
	52	Sampling	12MAY2010	MS	MG
	53	Second sampling	11JUN2010	MS	MG
	A	Go to production	04NOV2010	MS	MG

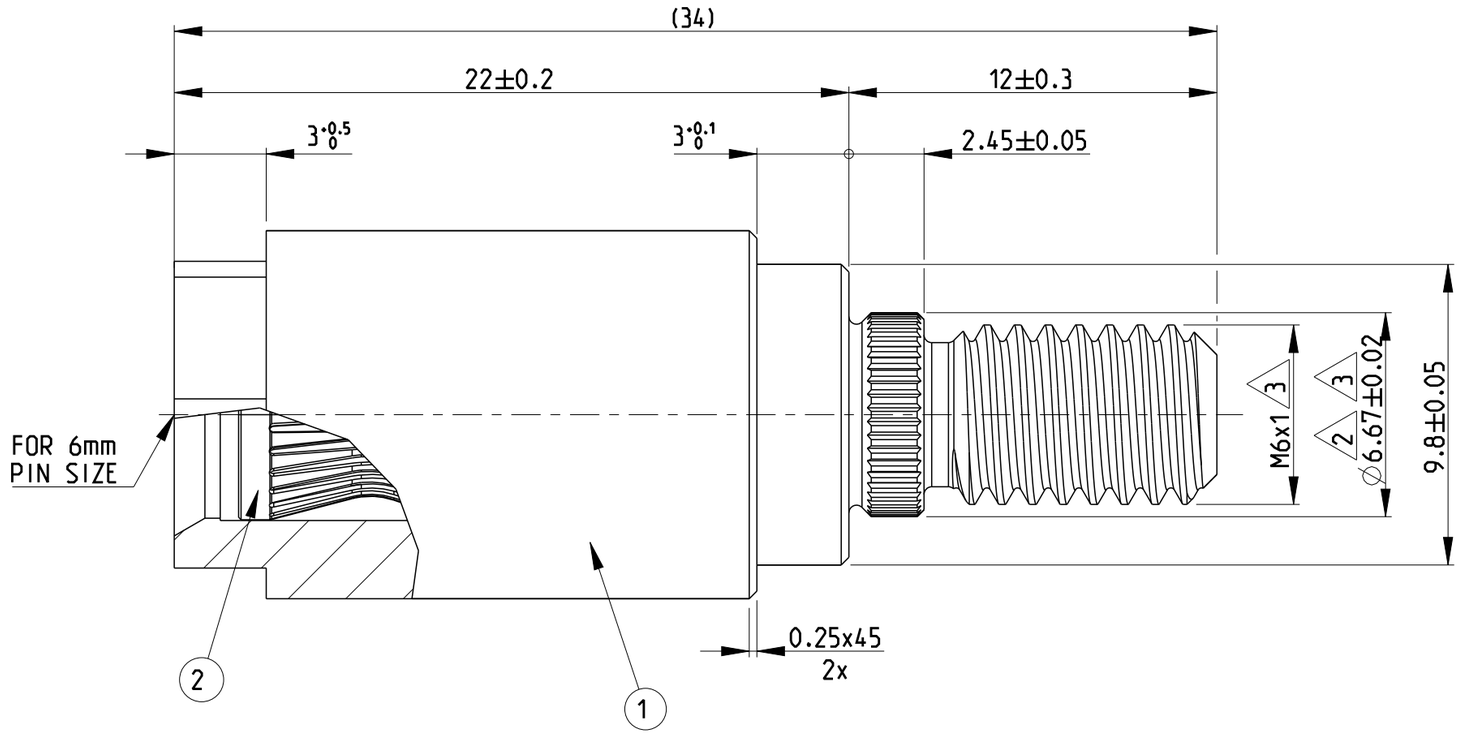

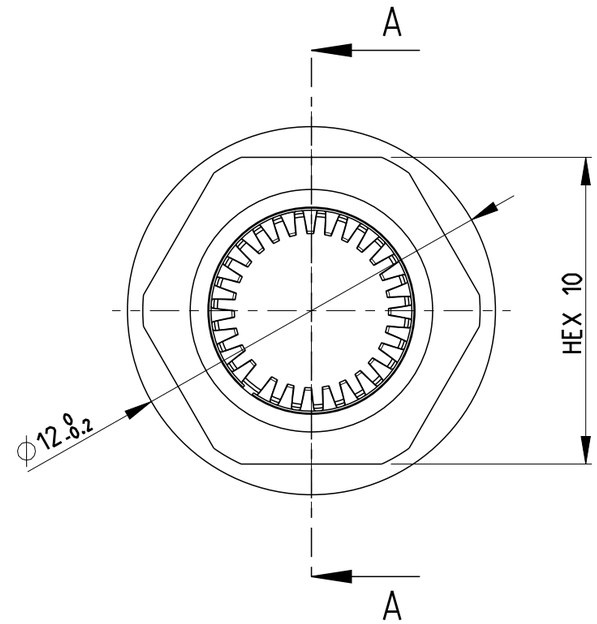

SECTION A-A

RECOMMENDED
PANEL CUT OUT

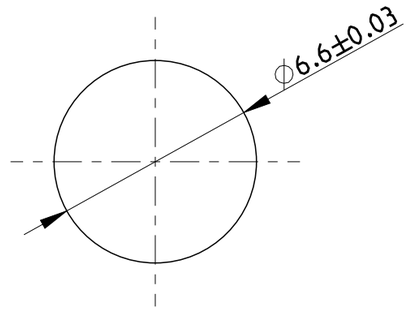

1 General tolerances acc.to ISO 2768-mH

2 Knurl according to DIN 82 RAA 0.5

3 Coupling torque 5N max.

4) Bulk-packagin

TE PN	Item	Description	Material	Plating
619445-1	2	CROWN	BeCu	min. 0.2 µm Au over Ni
	1	Outer Con.	Brass	min. 5 µm Ag

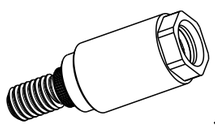

1:1

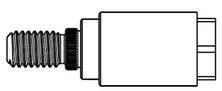

1:1

THIS DRAWING IS A CONTROLLED DOCUMENT FOR TYCO ELECTRONICS CORPORATION. IT IS SUBJECT TO CHANGE AND THE CONTROLLING ENGINEERING ORGANIZATION SHOULD BE CONTACTED FOR THE LATEST REVISION.

DIMENSIONS: mm

TOLERANCES UNLESS OTHERWISE SPECIFIED:
0 PLC ±-
1 PLC ±-
2 PLC ±-
3 PLC ±-
4 PLC ±-
ANGLES ±1°

MATERIAL -

FINISH -

DWN M.Scheggia 03MAY2010
CHK M.Grazioli 03MAY2010
APVD -
PRODUCT SPEC -
APPLICATION SPEC -
WEIGHT -

Tyco Electronics
Tyco Electronics
Lugano - Switzerland

NAME
STRAIGHT SOCKET
PIN SIZE 6mm
125 A

SIZE	CAGE CODE	DRAWING NO	RESTRICTED TO
A3	00779	C-619445	-

SCALE 5:1 SHEET 1 OF 1 REV A

AMP 1470-19 REV 31MAR2000