Chipsmall Limited consists of a professional team with an average of over 10 year of expertise in the distribution of electronic components. Based in Hongkong, we have already established firm and mutual-benefit business relationships with customers from,Europe,America and south Asia,supplying obsolete and hard-to-find components to meet their specific needs.

With the principle of “Quality Parts,Customers Priority,Honest Operation,and Considerate Service”,our business mainly focus on the distribution of electronic components. Line cards we deal with include Microchip,ALPS,ROHM,Xilinx,Pulse,ON,Everlight and Freescale. Main products comprise IC,Modules,Potentiometer,IC Socket,Relay,Connector.Our parts cover such applications as commercial,industrial, and automotives areas.

We are looking forward to setting up business relationship with you and hope to provide you with the best service and solution. Let us make a better world for our industry!

Contact us

Tel: +86-755-8981 8866 Fax: +86-755-8427 6832
Email & Skype: info@chipsmall.com Web: www.chipsmall.com
Address: A1208, Overseas Decoration Building, #122 Zhenhua RD., Futian, Shenzhen, China

THIS DRAWING IS UNPUBLISHED. RELEASED FOR PUBLICATION OCT ,2004.
© COPYRIGHT 2004 BY TYCO ELECTRONICS CORPORATION. ALL RIGHTS RESERVED.

LOC	DIST
J	—

REVISIONS 変更

P	LTR	DESCRIPTION	DATE	DWN	APVD
	A	RELEASED	08OCT04	T.K	K.I

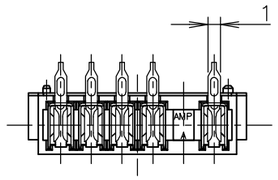

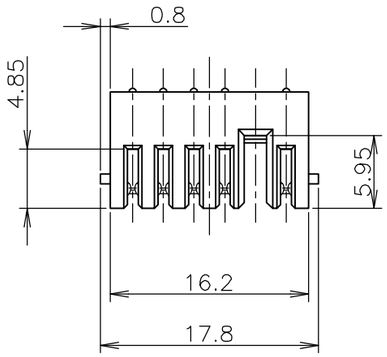

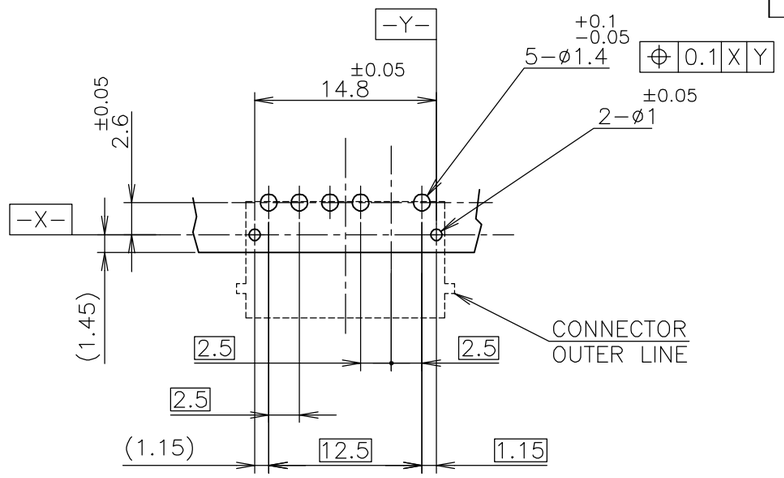

基板取付推奨寸法
RECOMMENDED P.C.BOARD LAYOUT
P.C.BOARD THK 0.8~1.2
(VIEW FROM CONNECTOR MOUNTING SIDE)

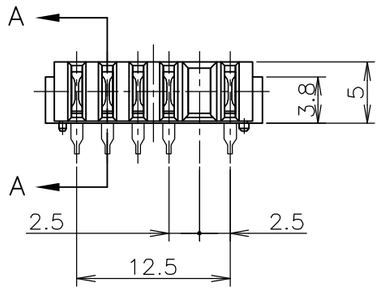

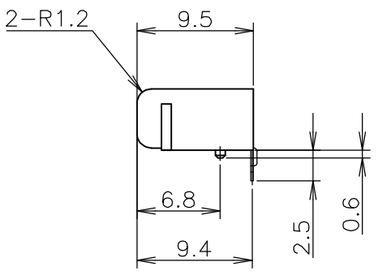

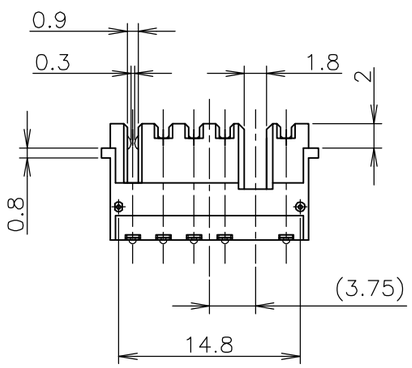

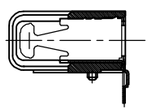

A−A

1 材料 ハウジング：熱可塑性樹脂 UL94V−0
色；黒
コンタクト：銅合金

2 仕上げ コンタクト：Ni 下地めっき
接触部 Pb−Ni めっき
接触部 Au フラッシュめっき
半田付け部 すずめっき

1 MATERIAL HOUSING : THERMOPLASTIC RESIN, UL94V−0
COLOR ; BLACK
CONTACT : COPPER ALLOY

2 FINISH CONTACT : Ni ALL OVER UNDER PL
Pd−Ni PL. AT CONTACT AREA
Au FLASH PL. AT CONTACT AREA
TIN PL. AT LEAD AREA

6318430−1 :AS SHOW

THIS DRAWING IS A CONTROLLED DOCUMENT.

GENERAL TOLERANCE 一般公差
10≧ : ±0.2
30≧ > 10 : ±0.25
100≧ > 30 : ±0.3
ANGLES : ±3°

DIMENSIONS: 単位： 粍 mm

TOLERANCES UNLESS OTHERWISE SPECIFIED: 一般公差
0 PLC ±−
1 PLC ±−
2 PLC ±−
3 PLC ±−
4 PLC ±−
ANGLES ±−

MATERIAL 材料 1
FINISH 仕上 2

DWN	T.KATANO	08OCT04
CHK	T.KIMURA	08OCT04
APVD	K.IKEGAMI	08OCT04
PRODUCT SPEC 製品規格	108−5652	
APPLICATION SPEC 取付適用規格	—	
WEIGHT	—	

CUSTOMER DRAWING

tyco Electronics
Tyco Electronics AMP K.K.
Kawasaki, Japan

NAME 名称
RECEPTACLE ASSEMBLY
2.5mm PITCH 2ND BATTERY CONNECTOR
—

SIZE	CAGE CODE	DRAWING NO 番号	RESTRICTED TO
A3	00779	C−6318430	—

SCALE 尺度	SHEET	OF	REV
2:1	1	1	A