Chipsmall Limited consists of a professional team with an average of over 10 year of expertise in the distribution of electronic components. Based in Hongkong, we have already established firm and mutual-benefit business relationships with customers from,Europe,America and south Asia,supplying obsolete and hard-to-find components to meet their specific needs.

With the principle of “Quality Parts,Customers Priority,Honest Operation,and Considerate Service”,our business mainly focus on the distribution of electronic components. Line cards we deal with include Microchip,ALPS,ROHM,Xilinx,Pulse,ON,Everlight and Freescale. Main products comprise IC,Modules,Potentiometer,IC Socket,Relay,Connector.Our parts cover such applications as commercial,industrial, and automotives areas.

We are looking forward to setting up business relationship with you and hope to provide you with the best service and solution. Let us make a better world for our industry!

Contact us

Tel: +86-755-8981 8866 Fax: +86-755-8427 6832
Email & Skype: info@chipsmall.com Web: www.chipsmall.com
Address: A1208, Overseas Decoration Building, #122 Zhenhua RD., Futian, Shenzhen, China

THIS DRAWING IS UNPUBLISHED. RELEASED FOR PUBLICATION 20
© COPYRIGHT 20 BY TYCO ELECTRONICS CORPORATION. ALL RIGHTS RESERVED.

LOC	DIST
ES	00

REVISIONS

P	LTR	DESCRIPTION	DATE	DWN	APVD
	0	RELEASED PER ECR-05-001438	07APR05	J.Z	I.E
	-	-	-	-	-

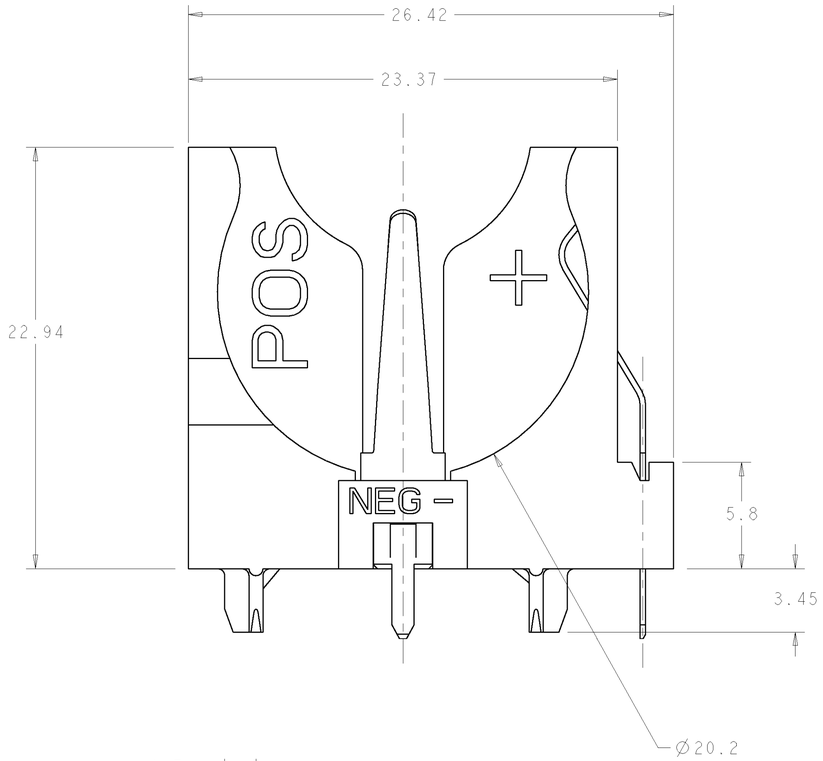

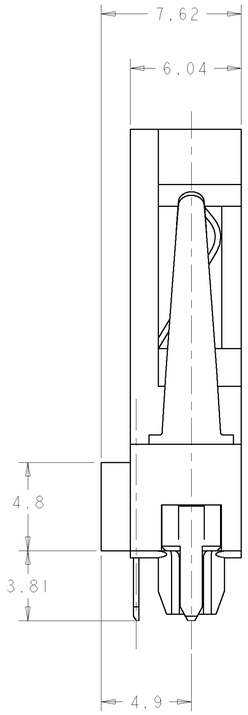

1. MATERIAL: CONNECTOR HOUSING- PBT, GLASS FILLED, UL-94V-0 FLAME CLASS RATING, BLACK.
   CONTACTS- STAINLESS STEEL, TIN COATED 0.0015-0.0040 THICK OVER NICKEL 0.0015 MIN THICK.
2. CONNECTOR ACCEPTS BATTERY NUMBER CR2032.

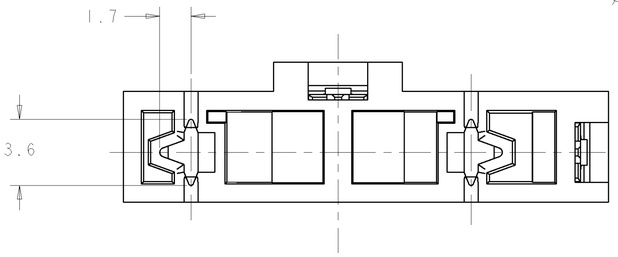

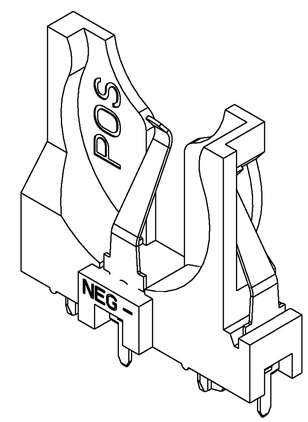

SCALE 4:1

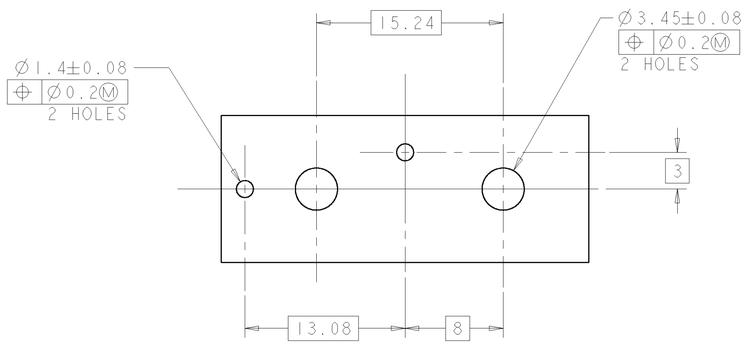

PC BOARD LAYOUT VIEWED FROM COMPONENT SIDE OF BOARD
SCALE 4:1

THIS PRODUCT HAS NOT BEEN QUALIFIED BY TYCO ENGINEERING

THIS DRAWING IS A CONTROLLED DOCUMENT FOR TYCO ELECTRONICS CORPORATION. IT IS SUBJECT TO CHANGE AND THE CONTROLLING ENGINEERING ORGANIZATION SHOULD BE CONTACTED FOR THE LATEST REVISION.	DWN Vic Slack 12JUN2001	tyco Electronics	Tyco Electronics Harrisburg, PA 17105-3608
	CHK Mitch Miller 13JUN2001		
DIMENSIONS: mm	APVD RANDY SIMMONS 31MAY2002	NAME	BATTERY CONNECTOR ASSEMBLY, VERTICAL MOUNT -
TOLERANCES UNLESS OTHERWISE SPECIFIED: 0 PLC ±- 1 PLC ±- 2 PLC ±- 3 PLC ±- 4 PLC ±- ANGLES ±-	PRODUCT SPEC -		
	APPLICATION SPEC -	SIZE A1 / CAGE CODE 00779 / DRAWING NO C- 6339488	RESTRICTED TO -
MATERIAL - -	WEIGHT -		
FINISH - -	CUSTOMER DRAWING	SCALE 6:1 / SHEET 1 OF 1	REV 0

6339488-1
PART NO.