Chipsmall Limited consists of a professional team with an average of over 10 year of expertise in the distribution of electronic components. Based in Hongkong, we have already established firm and mutual-benefit business relationships with customers from,Europe,America and south Asia,supplying obsolete and hard-to-find components to meet their specific needs.

With the principle of “Quality Parts,Customers Priority,Honest Operation,and Considerate Service”,our business mainly focus on the distribution of electronic components. Line cards we deal with include Microchip,ALPS,ROHM,Xilinx,Pulse,ON,Everlight and Freescale. Main products comprise IC,Modules,Potentiometer,IC Socket,Relay,Connector.Our parts cover such applications as commercial,industrial, and automotives areas.

We are looking forward to setting up business relationship with you and hope to provide you with the best service and solution. Let us make a better world for our industry!

Contact us

Tel: +86-755-8981 8866 Fax: +86-755-8427 6832
Email & Skype: info@chipsmall.com Web: www.chipsmall.com
Address: A1208, Overseas Decoration Building, #122 Zhenhua RD., Futian, Shenzhen, China

THIS DRAWING IS UNPUBLISHED. RELEASED FOR PUBLICATION -,- .
© COPYRIGHT - BY TYCO ELECTRONICS CORPORATION. ALL RIGHTS RESERVED.

LOC	DIST
H	—

REVISIONS

P	LTR	DESCRIPTION	DATE	DWN	APVD
	B	EH10-0680-05	02-06-05	BSV	BM
	C	ECR-06-026577	14-11-06	BSV	BM
	D	ECR-10-018652	10SEP10	SW	MQW

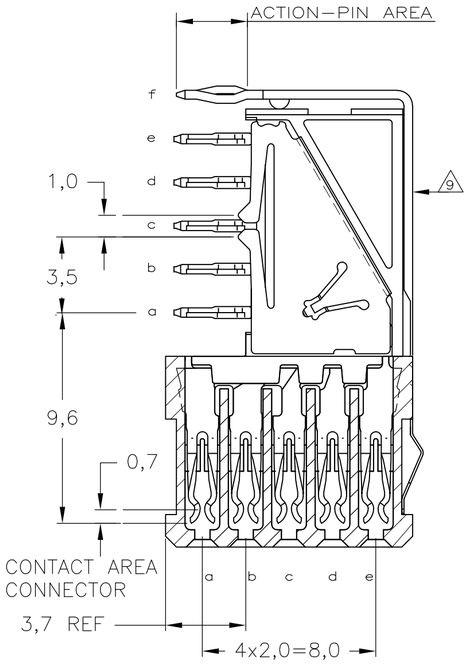

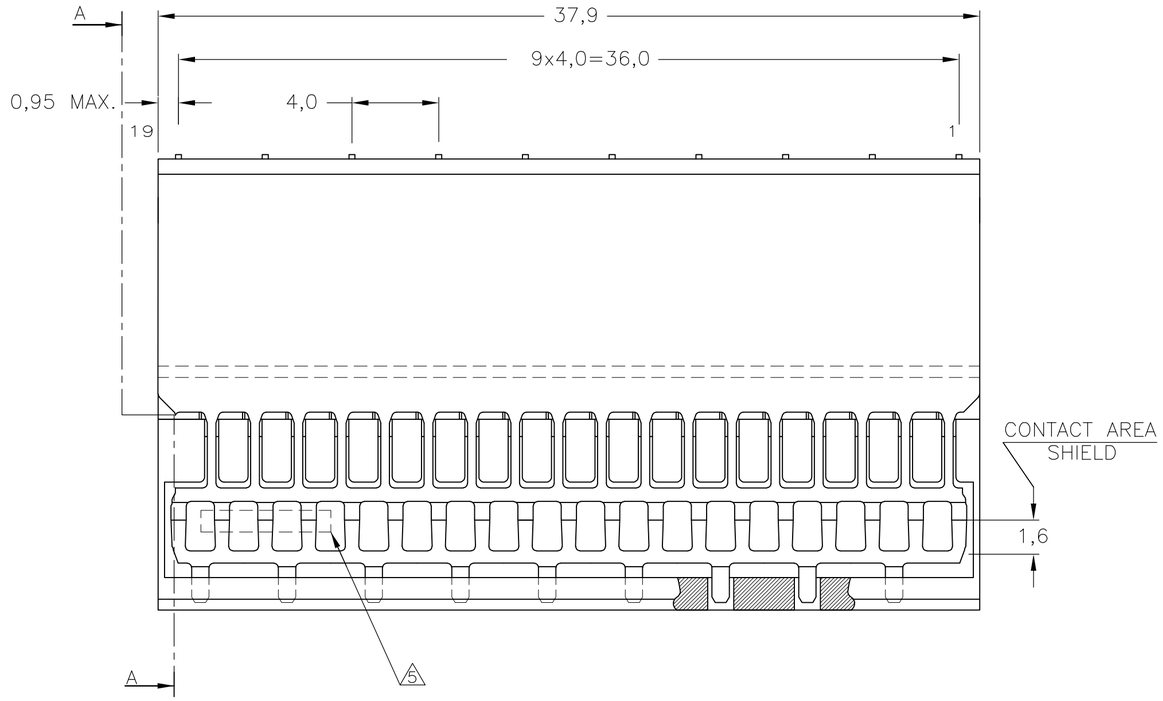

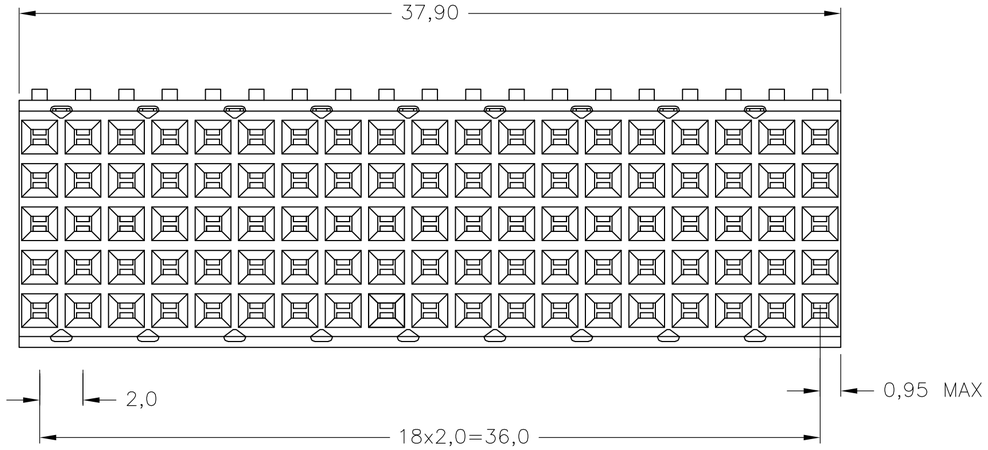

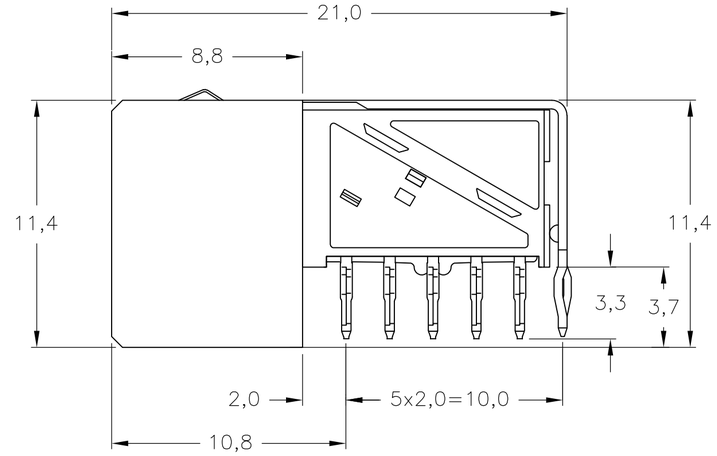

NOTES:

1. MATERIAL CONTACTS; PHOSPHORBRONZE
   MATERIAL SHIELDS ; PHOSPHORBRONZE
   MATERIAL HOUSING; GLASSFILLED POLYESTER (GRAY)
2. GENERAL CONTACT PLATING SPECIFICATION: UNDERPLATING (ENTIRE CONTACT): 1,27µm NICKEL MIN. AND ACTION PIN: 0,5µm TIN-LEAD MIN.
   FOR PLATING OF MATING SURFACES SEE APPLICABLE SPECIFICATION REFERENCE FOR EACH DASH NUMBER.
3. CONFORMS TO ALL TESTING ACCORDING IEC 61076-4-101 PERFORMANCE LEVEL 2.
4. PLATING SHIELDS :
   GROUND RETURN SHIELD:
   CONTACT AREA: 0,76µm Au MIN.
   ACTION PIN : 0,5µm Sn MIN.
   REMAINDER : Ni
   REDUCED CROSS-TALK SHIELD: GOLD FLASH OVER 1,27 µm NICKEL MIN.
5. ASSEMBLY PRINTED WITH P/N AND DATECODE
   THE MARKING CAN APPEAR ON THE FRONT SIDE OR ON THE BACK SIDE.
6. HOLE PATTERN FOR FEMALE CONNECTOR TYPE B - 19 COLUMNS 95 PLATED-THROUGH HOLES AT 2x2mm SQUARE GRID
7. ROW "f" 10 PLATED THROUGH HOLES FOR UPPERSHIELD
8. PLATED SPOT ONLY ON COMPONENT SIDE, FORMING ONE CONTACT WTH PLATED THROUGH HOLES OF ROW C
9. SHIELD MOUNTED ON CONNECTOR WITH DOUBLE SIDED ADHESIVE TAPE
10. BASIC P.N. LOWERSHIELD: 5352029

RECOMMENDED P.C.B. HOLE LAY-OUT
COMPONENT SIDE AS SHOWN

SCALE 2,5:1

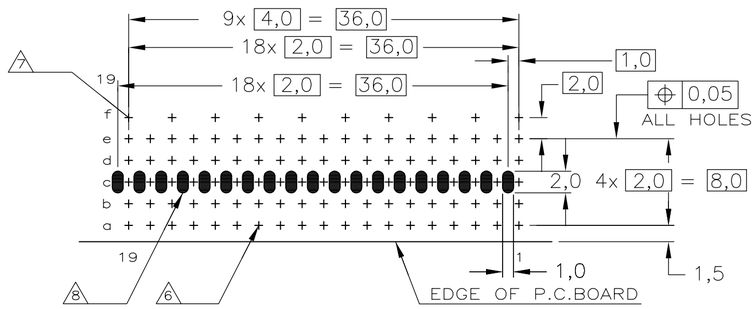

P.C.B. HOLE DIM. ACTION PIN
FOR DETAILS SEE
APPLICATION SPECIFICATION

2 3 4	1	
FINISH	MATERIAL	PARTNUMBER
		6345008-1

THIS DRAWING IS A CONTROLLED DOCUMENT.

DIMENSIONS: mm

TOLERANCES UNLESS OTHERWISE SPECIFIED:
0 PLC ± -
1 PLC ± -
2 PLC ± -
3 PLC ± -
4 PLC ± -
ANGLES ± -
±0.2

MATERIAL -
FINISH -

DWN	K.N.KIRAN	25AUG2004
CHK	B.MOOIJ	22MAR2005
APVD	B.MOOIJ	22MAR2005
PRODUCT SPEC	108-19082	
APPLICATION SPEC	114-19029	
WEIGHT	-	

Tyco Electronics
Tyco Electronics Corporation
s-HertogenBosch,Netherlands,

NAME
Z-PACK 2mm HM
TYPE B - 19 COLUMNS PRE-SHIELDED
RECEPTACLE WITH RED.CROSS-TALK SHIELDS

SIZE	CAGE CODE	DRAWING NO	RESTRICTED TO
A2	00779	C-6345008	-

CUSTOMER DRAWING | SCALE 5:1 | SHEET 1 OF 1 | REV D

6345008