Chipsmall Limited consists of a professional team with an average of over 10 year of expertise in the distribution of electronic components. Based in Hongkong, we have already established firm and mutual-benefit business relationships with customers from,Europe,America and south Asia,supplying obsolete and hard-to-find components to meet their specific needs.

With the principle of “Quality Parts,Customers Priority,Honest Operation,and Considerate Service”,our business mainly focus on the distribution of electronic components. Line cards we deal with include Microchip,ALPS,ROHM,Xilinx,Pulse,ON,Everlight and Freescale. Main products comprise IC,Modules,Potentiometer,IC Socket,Relay,Connector.Our parts cover such applications as commercial,industrial, and automotives areas.

We are looking forward to setting up business relationship with you and hope to provide you with the best service and solution. Let us make a better world for our industry!

Contact us

Tel: +86-755-8981 8866 Fax: +86-755-8427 6832
Email & Skype: info@chipsmall.com Web: www.chipsmall.com
Address: A1208, Overseas Decoration Building, #122 Zhenhua RD., Futian, Shenzhen, China

THIS DRAWING IS UNPUBLISHED. RELEASED FOR PUBLICATION 20
© COPYRIGHT 20 BY TYCO ELECTRONICS CORPORATION. ALL RIGHTS RESERVED.

LOC	DIST
GP	00

REVISIONS

P	LTR	DESCRIPTION	DATE	DWN	APVD
	B	REVISED PER ECO-10-012356	14DEC2010	CJV	EJB
	-	-	-	-	-
	-	-	-	-	-

1. HOUSINGS; POLYESTER, UL 94V-0 RATED, NATURAL
   SIGNAL AND SIGNAL GROUND CONTACTS: COPPER ALLOY
   UTILITY CONTACTS: PHOSPHOR BRONZE

2. UTILITY CONTACTS: 0.76µm MIN GOLD IN CONTACT AREA,
   2.54µm MIN TIN-LEAD ON PCB TAILS, OVER 1.27µm MIN NICKEL OVER ALL.
   SIGNAL AND SIGNAL GROUND CONTACTS: 0.76µm MIN GOLD IN CONTACT AREA,
   2.54µm MIN TIN-LEAD ON PCB TAILS, OVER 1.27µm MIN NICKEL OVER ALL.

3. ROWS A, C, D, AND F ARE SIGNAL CONTACTS. ROWS B AND E ARE SIGNAL GROUND CONTACTS.

4. DIMENSIONS PER CUSTOMER BOARD LAYOUT.

5. SEE UTILITY CONTACT SEQUENCE TABLE FOR LOCATION AND LEVEL/LENGTH OF UTILITY CONTACTS FOR EACH PRODUCT PART NUMBER. UTILITY LEVEL 1 CAN BE USED FOR SENSING. UTILITY LEVELS 2, 3, AND 4 CAN BE USED FOR POWER, GROUND, OR ESD. SEQUENCING SHOWN IN SECTION E-E SHOWS THREE LEVELS FOR COMPARISON. UTILITY LEVEL 2 EQUALS THE SIGNAL GROUND CONTACT LEVEL. SIGNAL LEVEL IS BETWEEN UTILITY LEVELS 1 AND 2.

6. BLOCK DIAGRAM AND CONTACT IDENTIFICATION APPLY TO COPLANAR NON-INVERTED APPLICATION ONLY. CONTACT IDENTIFICATION REVERSES FOR INVERTED APPLICATIONS, I.E COPLANAR OR MID-BOARD INVERTED.

7. COMPANY LOGO IN APPROXIMATE AREA SHOWN.

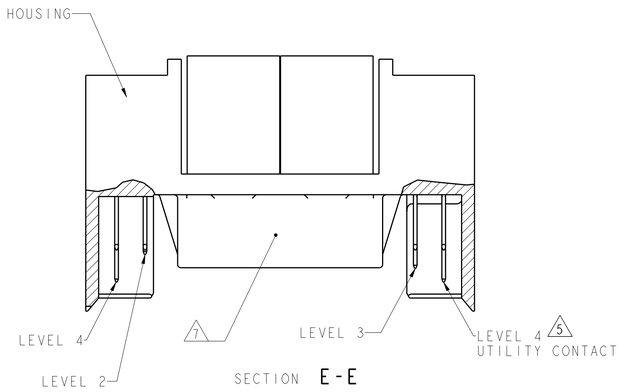

SECTION E-E

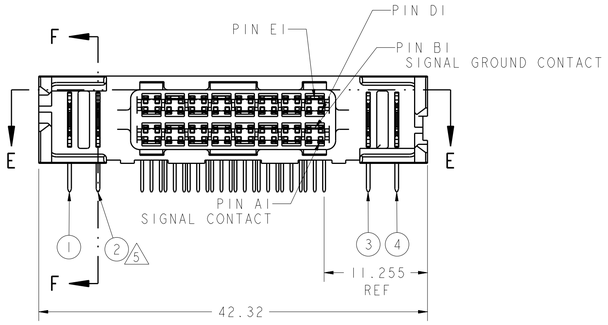

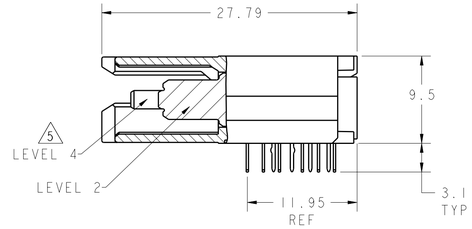

SECTION F-F

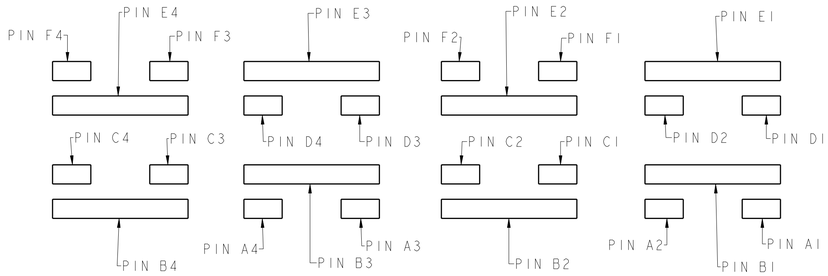

BLOCK DIAGRAM
MATING FACE CONFIGURATION

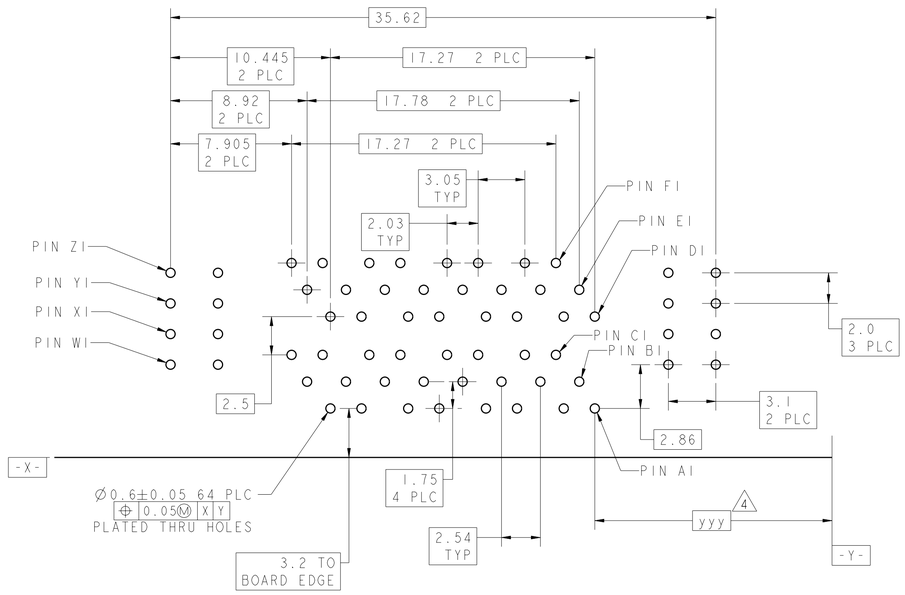

RECOMMENDED PC BOARD FOOTPRINT
COMPONENT SIDE SHOWN
SCALE 5:1

5 UTILITY CONTACT SEQUENCE TABLE
UTILITY CONTACT LEVEL 1, 2, 3, OR 4

1	2	3	4	PART NUMBER
4	3	3	4	6367582-1
UTILITY CONTACT LOCATION				

THIS DRAWING IS A CONTROLLED DOCUMENT FOR TYCO ELECTRONICS CORPORATION. IT IS SUBJECT TO CHANGE AND THE CONTROLLING ENGINEERING ORGANIZATION SHOULD BE CONTACTED FOR THE LATEST REVISION.

DIMENSIONS: mm

TOLERANCES UNLESS OTHERWISE SPECIFIED:
0 PLC ±-
1 PLC ±0.3
2 PLC ±0.25
3 PLC ±-
4 PLC ±-
ANGLES ±-

MATERIAL 1
FINISH 2

DWN C. VALENTINE 14DEC2010
CHK E. BRIANT 14DEC2010
APVD E. BRIANT 14DEC2010
PRODUCT SPEC 108-1985
APPLICATION SPEC 114-13068
WEIGHT -

Tyco Electronics
Tyco Electronics
Harrisburg, PA 17105-3608

NAME Z-DOK+ ADAPTER BOARD CONNECTOR ASSEMBLY, 16 SIGNAL DIFF. PAIR, 2 UTILITY CONTACTS PER SIDE

SIZE	CAGE CODE	DRAWING NO	RESTRICTED TO
A1	00779	C-6367582	-

CUSTOMER DRAWING | SCALE 3:1 | SHEET 1 OF 1 | REV B