Chipsmall Limited consists of a professional team with an average of over 10 year of expertise in the distribution of electronic components. Based in Hongkong, we have already established firm and mutual-benefit business relationships with customers from,Europe,America and south Asia,supplying obsolete and hard-to-find components to meet their specific needs.

With the principle of “Quality Parts,Customers Priority,Honest Operation,and Considerate Service”,our business mainly focus on the distribution of electronic components. Line cards we deal with include Microchip,ALPS,ROHM,Xilinx,Pulse,ON,Everlight and Freescale. Main products comprise IC,Modules,Potentiometer,IC Socket,Relay,Connector.Our parts cover such applications as commercial,industrial, and automotives areas.

We are looking forward to setting up business relationship with you and hope to provide you with the best service and solution. Let us make a better world for our industry!

Contact us

Tel: +86-755-8981 8866 Fax: +86-755-8427 6832
Email & Skype: info@chipsmall.com Web: www.chipsmall.com
Address: A1208, Overseas Decoration Building, #122 Zhenhua RD., Futian, Shenzhen, China

THIS DRAWING IS UNPUBLISHED. RELEASED FOR PUBLICATION -,- .
© COPYRIGHT - BY TYCO ELECTRONICS CORPORATION. ALL RIGHTS RESERVED.

LOC	DIST
CM	00

REVISIONS

P	LTR	DESCRIPTION	DATE	DWN	APVD
	D	ECO-07-012895	22JUN07	KW	DB
	D1	REVISED PER ECO-09-024717	03DEC09	KK	AEG

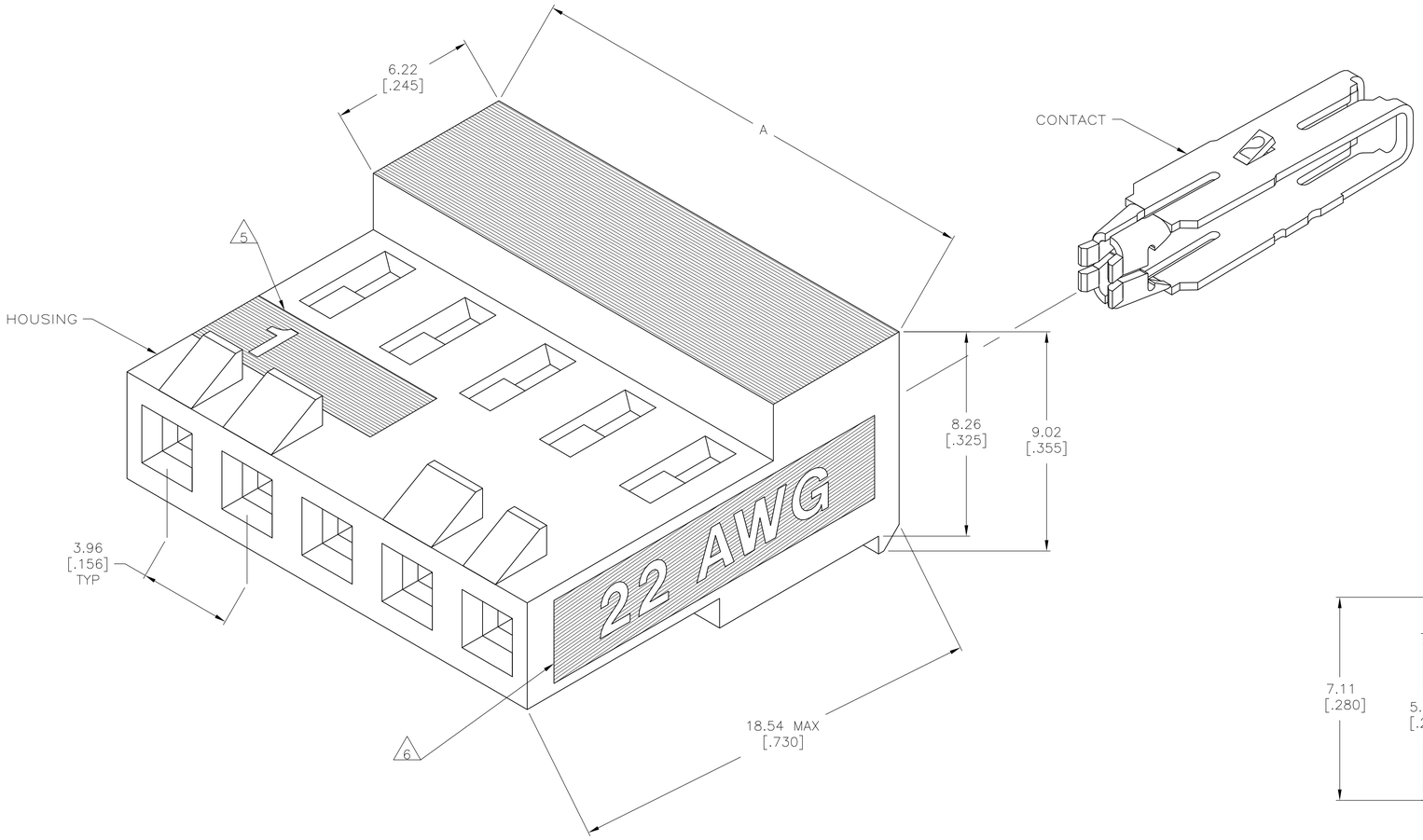

1. OPERATING TEMPERATURE: -55° C TO 105°C.
2. MATERIAL: HOUSING, NYLON 6/6, UL 94V-0, BLACK
   CONTACT, 0.30 [.012] THICK COPPER ALLOY
3. FINISH: BRIGHT TIN-LEAD PLATE 0.00203-0.00508 [.000080-.000200"] THICK OR MATTE WHISKER MITIGATED TIN 0.00203 [.000080] MIN THICKNESS OVER NICKEL UNDERPLATE.
4. LUBRICATED WITH AMP ANTI-FRETTING LUBRICANT.
5. IDENTIFICATION NUMBER FOR FIRST CIRCUIT.
6. WIRE GAUGE IDENTIFICATION
7. DIMENSIONS IN BRACKETS ARE IN INCHES.
8. CONTACT MUST ACCEPT 1.14±0.03 [.045±.001] SQUARE POST AND REMAINED LOCKED IN POSITION.
9. OBSOLETE PARTS: OBSOLETE CIS STREAMLINING PER D.RENAUD/D.SINISI

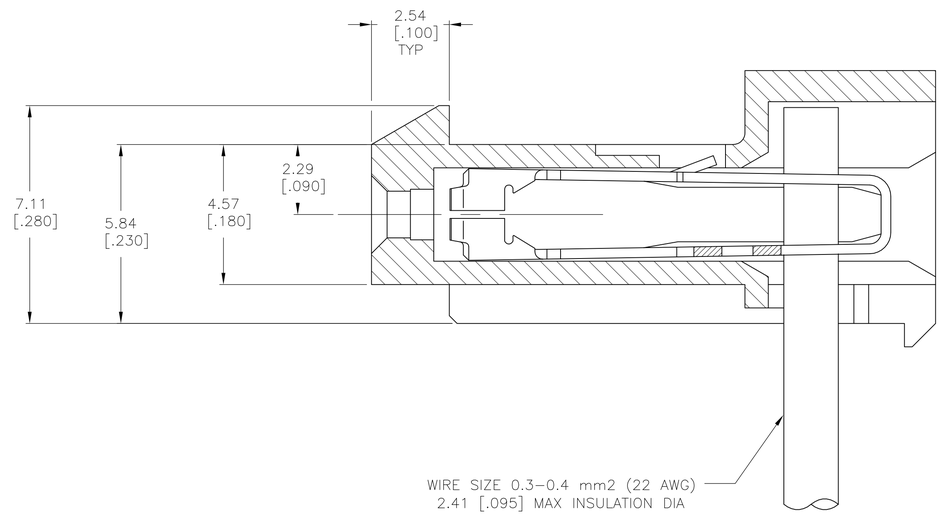

FINISH	A		NO OF CKTS	PART NO
TIN	47.55±0.30	[1.872±.012]	12	4-644371-2
TIN	43.59±0.30	[1.716±.012]	11	4-644371-1
TIN	39.62±0.30	[1.560±.012]	10	4-644371-0
TIN	35.66±0.30	[1.404±.012]	9	3-644371-9
TIN	31.70±0.30	[1.248±.012]	8	3-644371-8
TIN	27.74±0.30	[1.092±.012]	7	3-644371-7
TIN	23.77±0.30	[.936±.012]	6	3-644371-6
TIN	19.81±0.30	[.780±.012]	5	3-644371-5
TIN	15.85±0.15	[.624±.006]	4	3-644371-4
TIN	11.89±0.15	[.468±.006]	3	3-644371-3
TIN	7.92±0.15	[.312±.006]	2	3-644371-2

	FINISH	A		NO OF CKTS	PART NO
9	SUPERSEDED BY 4-644371-2	TIN-LEAD	47.55±0.30 [1.872±.012]	12	~~1-644371-2~~
9	SUPERSEDED BY 4-644371-1	TIN-LEAD	43.59±0.30 [1.716±.012]	11	~~1-644371-1~~
9	SUPERSEDED BY 4-644371-0	TIN-LEAD	39.62±0.30 [1.560±.012]	10	~~1-644371-0~~
9	SUPERSEDED BY 3-644371-9	TIN-LEAD	35.66±0.30 [1.404±.012]	9	~~644371-9~~
9	SUPERSEDED BY 3-644371-8	TIN-LEAD	31.70±0.30 [1.248±.012]	8	~~644371-8~~
9	SUPERSEDED BY 3-644371-7	TIN-LEAD	27.74±0.30 [1.092±.012]	7	~~644371-7~~
		TIN-LEAD	23.77±0.30 [.936±.012]	6	644371-6
		TIN-LEAD	19.81±0.30 [.780±.012]	5	644371-5
		TIN-LEAD	15.85±0.15 [.624±.006]	4	644371-4
		TIN-LEAD	11.89±0.15 [.468±.006]	3	644371-3
		TIN-LEAD	7.92±0.15 [.312±.006]	2	644371-2

THIS DRAWING IS A CONTROLLED DOCUMENT.

DIMENSIONS: mm [INCHES]

TOLERANCES, UNLESS OTHERWISE SPECIFIED:
0 PLC ± -
1 PLC ± -
2 PLC ± -
3 PLC ± 0.13[.005]
4 PLC ± -
ANGLES ± -

MATERIAL 2
FINISH 3

METRIC

DWN C. MARTIN 23APR90
CHK R. SWING 23APR90
APVD G.MILLER 24APR90
PRODUCT SPEC 108-1219
APPLICATION SPEC 114-1048
WEIGHT -

Tyco Electronics
Tyco Electronics Corporation
Harrisburg, Pa 17105-3608

NAME MTA-156 CONNECTOR ASSEMBLY, QUAD, 22 AWG, WITH LOCKING RAMP

SIZE	CAGE CODE	DRAWING NO	RESTRICTED TO
A1	00779	C-644371	-

CUSTOMER DRAWING SCALE 10:1 SHEET 1 OF 1 REV D1