Chipsmall Limited consists of a professional team with an average of over 10 year of expertise in the distribution of electronic components. Based in Hongkong, we have already established firm and mutual-benefit business relationships with customers from,Europe,America and south Asia,supplying obsolete and hard-to-find components to meet their specific needs.

With the principle of “Quality Parts,Customers Priority,Honest Operation,and Considerate Service”,our business mainly focus on the distribution of electronic components. Line cards we deal with include Microchip,ALPS,ROHM,Xilinx,Pulse,ON,Everlight and Freescale. Main products comprise IC,Modules,Potentiometer,IC Socket,Relay,Connector.Our parts cover such applications as commercial,industrial, and automotives areas.

We are looking forward to setting up business relationship with you and hope to provide you with the best service and solution. Let us make a better world for our industry!

Contact us

Tel: +86-755-8981 8866 Fax: +86-755-8427 6832
Email & Skype: info@chipsmall.com Web: www.chipsmall.com
Address: A1208, Overseas Decoration Building, #122 Zhenhua RD., Futian, Shenzhen, China

THIS DRAWING IS UNPUBLISHED. RELEASED FOR PUBLICATION -,- .
© COPYRIGHT - BY TYCO ELECTRONICS CORPORATION. ALL RIGHTS RESERVED.

LOC	DIST
GP	00

REVISIONS

P	LTR	DESCRIPTION	DATE	DWN	APVD
	K	OBSOLETED -3 PER 0S12-0554-04	06 MAY 05	AWF	AWF

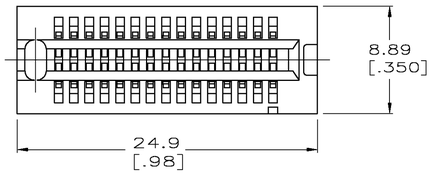

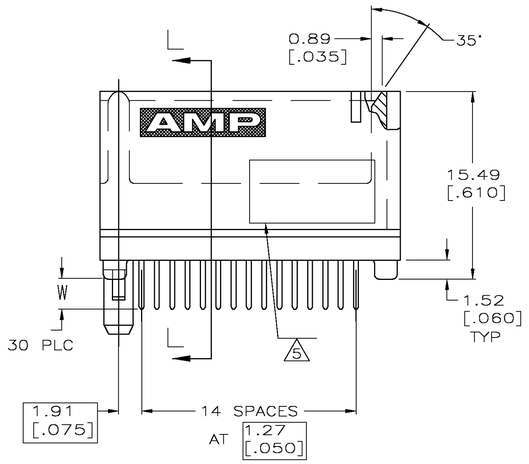

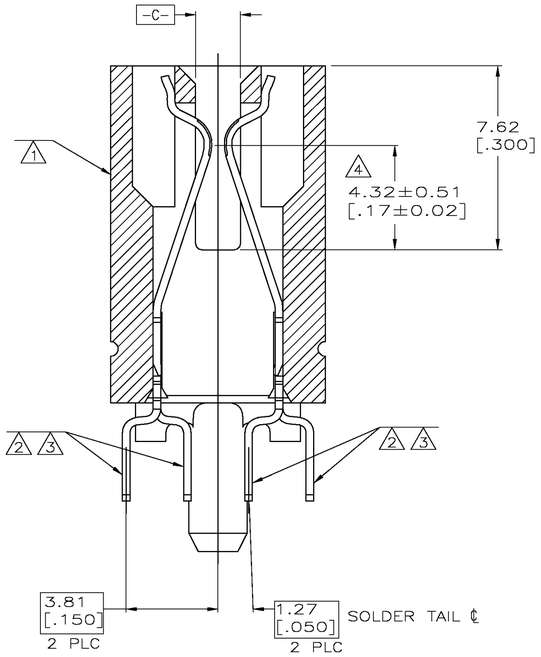

SECTION L-L
SCALE 8:1

1. HOUSING: HIGH TEMPERATURE THERMOPLASTIC. COLOR: BROWN.
2. CONTACT: PHOSPHOR BRONZE.
3. CONTACT FINISH: .000100 MIN NICKEL ALL OVER.
   .000030 MIN GOLD OVER NICKEL IN CONTACT AREA.
   .000100 MIN TIN-LEAD OVER NICKEL ON SOLDER TAILS.
4. DISTANCE FROM CONTACT POINT TO BOTTOM OF CARD SLOT.
5. AMP PART NUMBER, DATE CODE AND CSA LOGO MARKED IN APPROXIMATE AREA SHOWN.

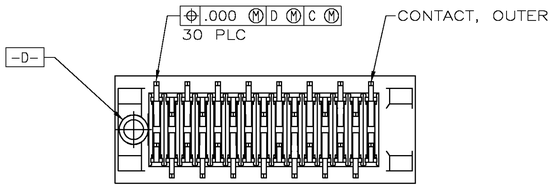

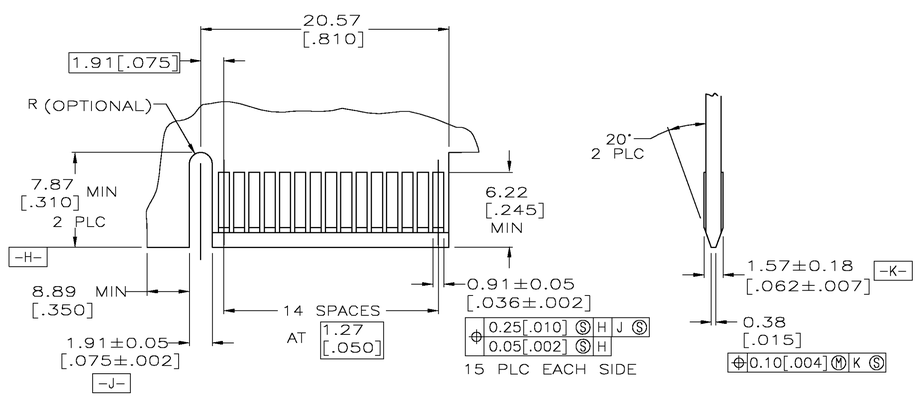

RECOMMENDED MATING BOARD EDGE CONFIGURATION

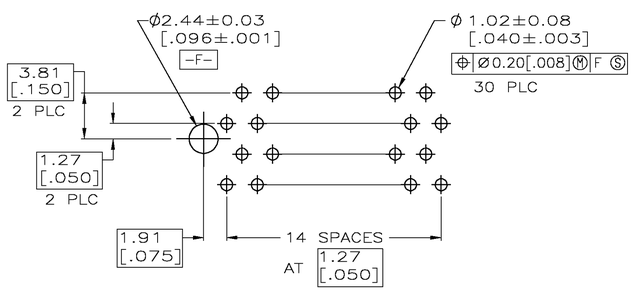

RECOMMENDED CONNECTOR MOUNTING HOLE PATTERN
(CONNECTOR SIDE SHOWN)

OBSOLETE	~~.125~~	~~650712-3~~
OBSOLETE	~~.14~~	~~650712-2~~
	.10	650712-1
	W	PART NUMBER

THIS DRAWING IS A CONTROLLED DOCUMENT.

DIMENSIONS: mm

TOLERANCES UNLESS OTHERWISE SPECIFIED:
0 PLC ± -
1 PLC ± -
2 PLC ± .01
3 PLC ± .005
4 PLC ± -
ANGLES ± 2°

MATERIAL 1 2
FINISH 3

DWN 3/21/91 K.L.CLOUSER/UTA
CHK 11-21-91 M.BOWERS
APVD -
PRODUCT SPEC 108-14034
APPLICATION SPEC 114-26012
WEIGHT -

Tyco Electronics
Tyco Electronics Corporation
Harrisburg, Pa 17105-3608

NAME
CONNECTOR ASSEMBLY,
END KEYED, 15 DUAL POSITION,
.050 SERIES, STANDARD EDGE

SIZE	CAGE CODE	DRAWING NO	RESTRICTED TO
A1	00779	C-650712	-

CUSTOMER DRAWING | SCALE 4:1 | SHEET 1 OF 1 | REV K