Chipsmall Limited consists of a professional team with an average of over 10 year of expertise in the distribution of electronic components. Based in Hongkong, we have already established firm and mutual-benefit business relationships with customers from,Europe,America and south Asia,supplying obsolete and hard-to-find components to meet their specific needs.

With the principle of “Quality Parts,Customers Priority,Honest Operation,and Considerate Service”,our business mainly focus on the distribution of electronic components. Line cards we deal with include Microchip,ALPS,ROHM,Xilinx,Pulse,ON,Everlight and Freescale. Main products comprise IC,Modules,Potentiometer,IC Socket,Relay,Connector.Our parts cover such applications as commercial,industrial, and automotives areas.

We are looking forward to setting up business relationship with you and hope to provide you with the best service and solution. Let us make a better world for our industry!

Contact us

Tel: +86-755-8981 8866 Fax: +86-755-8427 6832
Email & Skype: info@chipsmall.com Web: www.chipsmall.com
Address: A1208, Overseas Decoration Building, #122 Zhenhua RD., Futian, Shenzhen, China

660047-ENV

UNCONTROLLED DOCUMENT
WILL NOT BE UPDATED

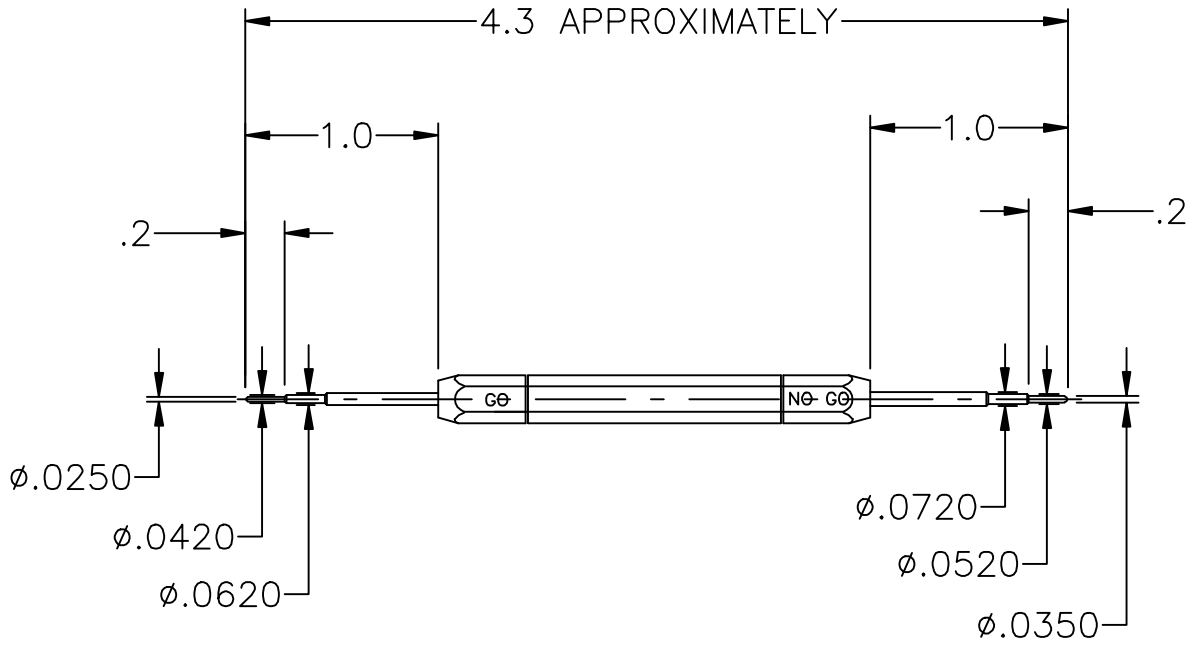

NOTES: I. THIS IS AN AUTOCAD DRAWING DO NOT CHANGE MANUALLY.

REV.	DESCRIPTION	BY	DATE	APR.
A	NEW RELEASE	DYO	01-14-11	MMK

THESE DRAWINGS, SPECIFICATIONS OR OTHER DATA ARE AND REMAIN, THE PROPERTY OF ASTRO TOOL CORP. AND MUST BE RETURNED UPON REQUEST. THEY CONTAIN INFORMATION OWNED AND/OR DEVELOPED BY ASTRO AT ITS OWN PRIVATE EXPENSE AND MAY NOT BE USED, DUPLICATED OR DISCLOSED TO OTHERS, IN WHOLE OR IN PART FOR DESIGN, MANUFACTURE OR PROCUREMENT WITHOUT THE WRITTEN PERMISSION OF ASTRO TOOL CORP. EACH AND EVERY TIME.

SCALE: N.T.S.
DWN BY: DYO
DATE: 01-14-11
APPROVED:

UNLESS OTHERWISE SPECIFIED:
DECIMALS:
.XXX ± .005
.XX ± .010
.X ± .030
ANGLES:
± 1°

ASTRO TOOL CORP.
21615 S.W. TUALATIN VALLEY HWY., BEAVERTON OR 97006
CAGE 58164

DESCRIPTION: ENVELOPE DRAWING: 660047 GAGE

PART NO. A 660047-ENV