Chipsmall Limited consists of a professional team with an average of over 10 year of expertise in the distribution of electronic components. Based in Hongkong, we have already established firm and mutual-benefit business relationships with customers from,Europe,America and south Asia,supplying obsolete and hard-to-find components to meet their specific needs.

With the principle of “Quality Parts,Customers Priority,Honest Operation,and Considerate Service”,our business mainly focus on the distribution of electronic components. Line cards we deal with include Microchip,ALPS,ROHM,Xilinx,Pulse,ON,Everlight and Freescale. Main products comprise IC,Modules,Potentiometer,IC Socket,Relay,Connector.Our parts cover such applications as commercial,industrial, and automotives areas.

We are looking forward to setting up business relationship with you and hope to provide you with the best service and solution. Let us make a better world for our industry!

Contact us

Tel: +86-755-8981 8866 Fax: +86-755-8427 6832
Email & Skype: info@chipsmall.com Web: www.chipsmall.com
Address: A1208, Overseas Decoration Building, #122 Zhenhua RD., Futian, Shenzhen, China

DRAWING MADE IN AMERICAN PROJECTION

TOOL NUMBER	689141-1		
	INSERTS		
TERMINAL NUMBER	60599		
	60753		
	60802		
	60809		
	60813		
	60824		
	60839		
	60973		
	61038		

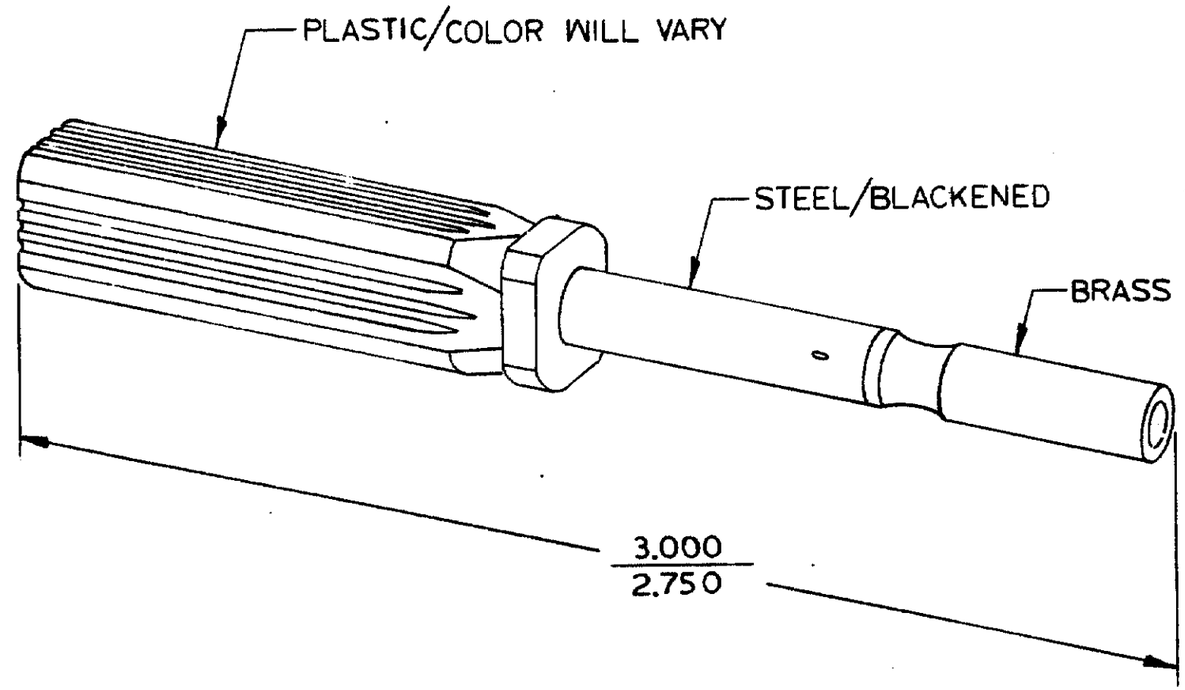

DIMENSIONS IN INCHES. DO NOT SCALE PRINT.

PRINT DIST 01

LTR	REVISION RECORD	DR	CHK	DATE
01	SUPD REDRAWN W/CHANGE		IM	2-24-70

NUMBER 689141

REQUIRED PER ASSEMBLY

REMARKS

DWG SIZE	NUMBER	NAME	REMARKS	ITEM NO

© 19 BY AMP INCORPORATED. ALL RIGHTS RESERVED.
AMP PRODUCTS COVERED BY PATENTS AND/OR PATENTS PENDING.

CUSTOMER COPY REFERENCE ONLY

DR 2/19/70 WMK

CHK 2-23-70 I.K. MILLER

DE 2/27/66 W.M. KISSINGER

APP 2/23/70

MATERIAL AND FINISH

WIRE - RANGE - INSULATION

TOLERANCE EXCEPT AS NOTED ±.015 ±1° 0'

SCALE N.T.S.

AMP INCORPORATED HARRISBURG, PENNA

CLASS P.C.B.

TYPE PINS

LOC A B

NO 689141

REV 01

NAME TOOL, INSERTION

AMP 1253 REV 11/65