Chipsmall Limited consists of a professional team with an average of over 10 year of expertise in the distribution of electronic components. Based in Hongkong, we have already established firm and mutual-benefit business relationships with customers from,Europe,America and south Asia,supplying obsolete and hard-to-find components to meet their specific needs.

With the principle of “Quality Parts,Customers Priority,Honest Operation,and Considerate Service”,our business mainly focus on the distribution of electronic components. Line cards we deal with include Microchip,ALPS,ROHM,Xilinx,Pulse,ON,Everlight and Freescale. Main products comprise IC,Modules,Potentiometer,IC Socket,Relay,Connector.Our parts cover such applications as commercial,industrial, and automotives areas.

We are looking forward to setting up business relationship with you and hope to provide you with the best service and solution. Let us make a better world for our industry!

Contact us

Tel: +86-755-8981 8866 Fax: +86-755-8427 6832
Email & Skype: info@chipsmall.com Web: www.chipsmall.com
Address: A1208, Overseas Decoration Building, #122 Zhenhua RD., Futian, Shenzhen, China

THIS DRAWING IS UNPUBLISHED. RELEASED FOR PUBLICATION -,- .
© COPYRIGHT - By - ALL RIGHTS RESERVED.

LOC	DIST
G	86

REVISIONS

P	LTR	DESCRIPTION	DATE	DWN	APVD
	A2	REVISED PER ECO-15-006978	06JUN2015	NK	MM

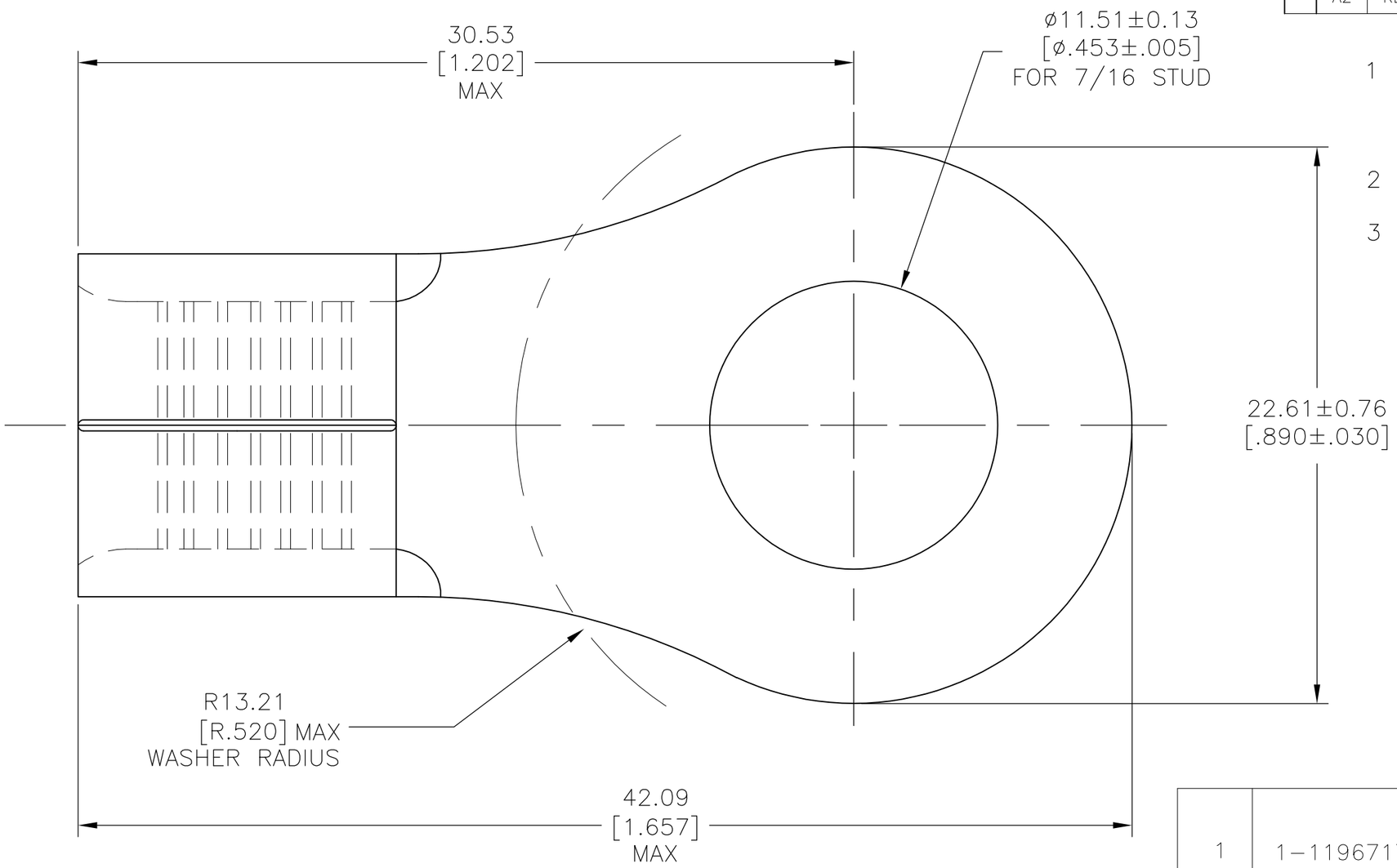

1 WIRE RANGE IS FOR #2 AWG STANDARD. WIRE CROSS SECTIONAL AREA RANGE: 52,600-83,700 CMA, STRANDED WIRE

2 THE TONGUE THK IS 1.77±0.076[.070±.003]

3 RECOMMENDED OPERATING TEMP -55°C TO +200°C FOR HEAT SHRINK TUBING

-1	PART NO	DESCRIPTION
1	1-1196717-9	HIGH AND LOW TEMPERTURE CROSS LINKED FLOUROPOLYMER HEAT SHRINK TUBING 15.875[.625]MIN IDX38.10±2.03[1.50±.08] RT555-5/8-0-SP
1	320741-1	TERMINAL BODY: COPPER PER ASTM B-152 ANNEALED FINISH: NICKEL PLATE .000300 MIN THK PER SAE AMS QQ-N-290

THIS DRAWING IS A CONTROLLED DOCUMENT.

DIMENSIONS: mm [INCHES]

TOLERANCES UNLESS OTHERWISE SPECIFIED:
0 PLC ± -
1 PLC ± -
2 PLC ± -
3 PLC ± -
4 PLC ± -
ANGLES ± 1°

MATERIAL -

FINISH -

DWN JR RUTH 08DEC09
CHK TOM MICHIELUTTI 08DEC09
APVD TOM MICHIELUTTI 08DEC09
PRODUCT SPEC —
APPLICATION SPEC —
WEIGHT —

TE Connectivity

NAME HEAT RESISTANT TERMINAL KIT

SIZE	CAGE CODE	DRAWING NO	RESTRICTED TO
A3	00779	C-696645	—

CUSTOMER DRAWING

SCALE	SHEET	REV
5:1	1 OF 1	A2