Chipsmall Limited consists of a professional team with an average of over 10 year of expertise in the distribution of electronic components. Based in Hongkong, we have already established firm and mutual-benefit business relationships with customers from,Europe,America and south Asia,supplying obsolete and hard-to-find components to meet their specific needs.

With the principle of “Quality Parts,Customers Priority,Honest Operation,and Considerate Service”,our business mainly focus on the distribution of electronic components. Line cards we deal with include Microchip,ALPS,ROHM,Xilinx,Pulse,ON,Everlight and Freescale. Main products comprise IC,Modules,Potentiometer,IC Socket,Relay,Connector.Our parts cover such applications as commercial,industrial, and automotives areas.

We are looking forward to setting up business relationship with you and hope to provide you with the best service and solution. Let us make a better world for our industry!

Contact us

Tel: +86-755-8981 8866 Fax: +86-755-8427 6832
Email & Skype: info@chipsmall.com Web: www.chipsmall.com
Address: A1208, Overseas Decoration Building, #122 Zhenhua RD., Futian, Shenzhen, China

Units:mm

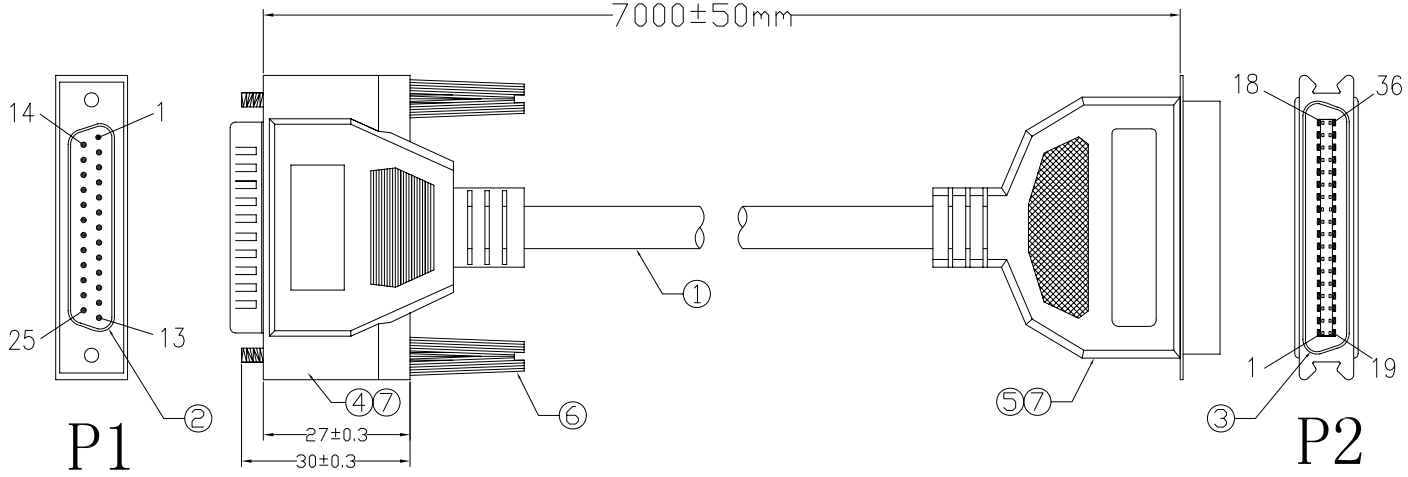

PIN ASSIGNMENT

P1		P2
1	黑	1
2	棕	2
3	红	3
4	橙	4
5	黄	5
6	绿	6
7	蓝	7
8	紫	8
9	灰	9
10	白	10
11	粉红	11
12	浅绿	12
13	红/黑	13
14	橙/黑	14
15	黄/黑	32
16	绿/黑	31
17	蓝/黑	36
18	紫/黑	33
19	白/黑	19
20	红/白	21
21	橙/白	23
22	绿/白	25
23	蓝/白	27
24	紫/白	29
25	棕/白	30
SHELL	地线	SHELL

Electronic Test:
1.100% Test,(Open,Short,Miss Wire)
2.Contact Resistance:5 ohm max.
3.Insulation Resistance:10M ohm min.
4.Hi-Pot:300V DC/10ms

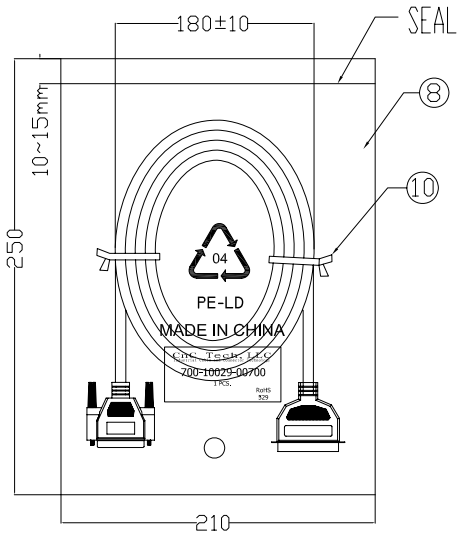

NO.	NAME	Q'TY	SPECIFICATION
⑩	TIE	2	WHITE L=180mm
⑨	PE BAG	1/5	CLEAR SIZE: 360*380*0.05mm PRINT BLACK"MADE IN CHINA"+"5PCS"印生产周期,有透气孔.
⑧	PE BAG	1	CLEAR SIZE: 210*250*0.05mm PRINT BLACK"MADE IN CHINA"+"1PC"印生产周期,有透气孔.
⑦	TUBE	2	HEAT SHRINK TUBE BLACK OD1.5*20MM
⑥	SCREW	2	#4-40UNC TYPE L=30mm,NICKEL PLATED,MOLD:BEIGE(IV-29) ABS
⑤	IN JACKET	9g	CLEAR LD-PE (Mould NO.:NM-62)
	OUT JACKET	30g	BEIGE(IV-29) 40P PVC(Mould NO.WM-145)
④	IN JACKET	9g	CLEAR LD-PE (Mould NO.:NM-33)
	OUT JACKET	30g	BEIGE(IV-29) 40P PVC(Mould NO.WM-017)
③	CONN	1	CN 36P MALE SODER TYPE PIN G/F SHELL NI-PLATED INSULATOR COLOR:BLUE
②	CONN	1	DB 25P MALE SODER TYPE PIN G/F SHELL NI-PLATED INSULATOR COLOR:BLUE
①	CABLE	1	NOUL 30#(7/0.10)*25C+D+AL/MY OD6.5mm JACKET BEIGE(IV-29) L=7000±30MM

CnC Tech, LLC

Industrial Cable and Connector Technology

DRAWED BY	ZHONGHS	DARWING NO.	
CHECKED BY		CUSTOMER	
APPROVAL BY		ITEM NO.	700-10029-00700
DECIDE BY		DATE	2012-02-06
VERSIONS/EDITEON	A/0	PROJECTION	