Chipsmall Limited consists of a professional team with an average of over 10 year of expertise in the distribution of electronic components. Based in Hongkong, we have already established firm and mutual-benefit business relationships with customers from,Europe,America and south Asia,supplying obsolete and hard-to-find components to meet their specific needs.

With the principle of “Quality Parts,Customers Priority,Honest Operation,and Considerate Service”,our business mainly focus on the distribution of electronic components. Line cards we deal with include Microchip,ALPS,ROHM,Xilinx,Pulse,ON,Everlight and Freescale. Main products comprise IC,Modules,Potentiometer,IC Socket,Relay,Connector.Our parts cover such applications as commercial,industrial, and automotives areas.

We are looking forward to setting up business relationship with you and hope to provide you with the best service and solution. Let us make a better world for our industry!

Contact us

Tel: +86-755-8981 8866 Fax: +86-755-8427 6832
Email & Skype: info@chipsmall.com Web: www.chipsmall.com
Address: A1208, Overseas Decoration Building, #122 Zhenhua RD., Futian, Shenzhen, China

PRODUCT NO.	70243–101LF
	70243–111LF

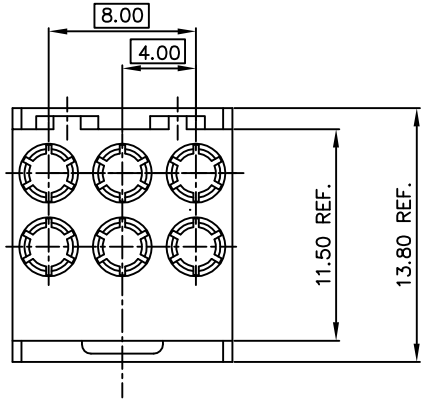

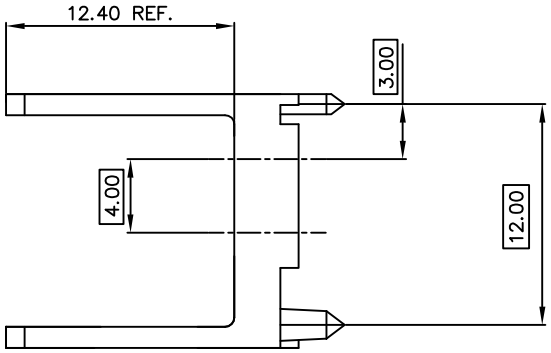

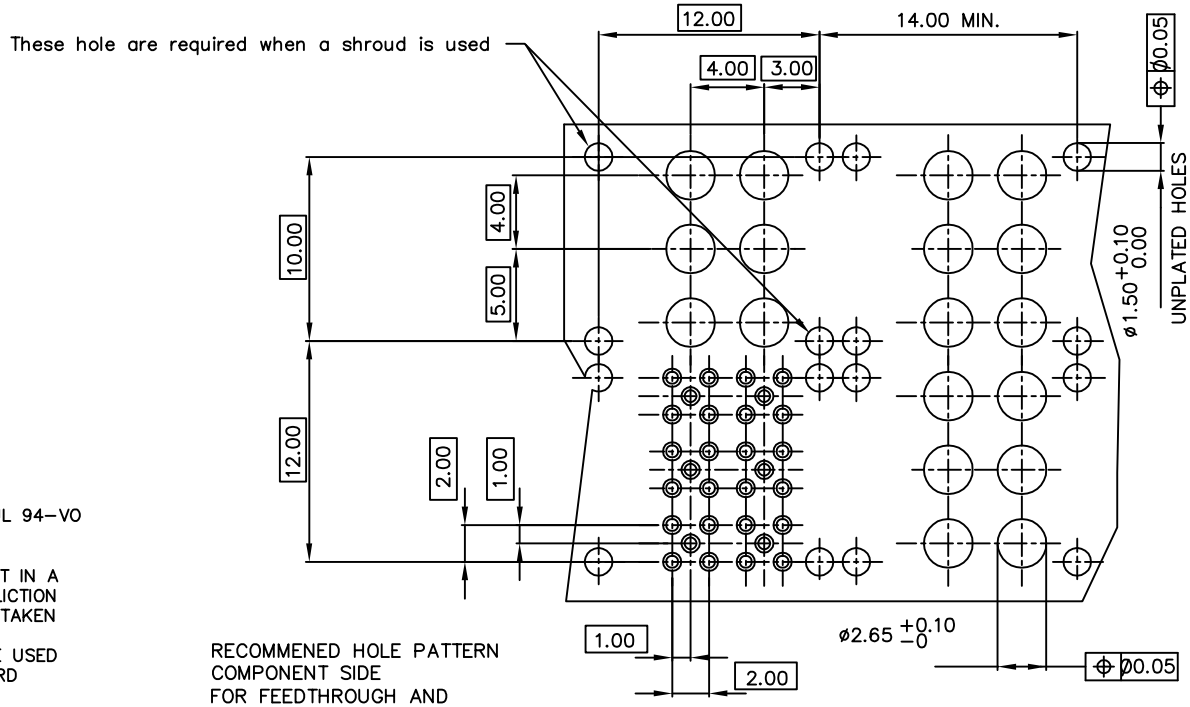

RECOMMENED HOLE PATTERN
COMPONENT SIDE
FOR FEEDTHROUGH AND
SOLDER TO BOARD.

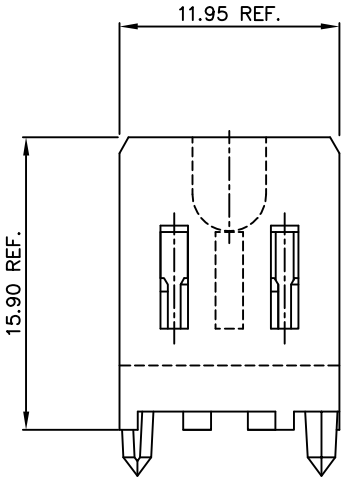

NOTE:
1) MATERIAL:
LIQUID CRYSTAL POLYMER
30% GLASS.
FLAME RETARDANT ACC. UL 94–VO
COLOR NATURAL.

2) WHEN USING THIS PRODUCT IN A STRAIGHT TO BOARD APPLICTION THE FOLLOWING MUST BE TAKEN INTO ACCOUNT.
–101LF HOUSING IS TO BE USED FOR THE SOLDER TO BOARD INSERT 88980–00Z.
–111LF HOUSING IS TO BE USED FOR THE PRESS–FIT TO BOARD INSERT 88978–001.

3) THIS PRODUCT WITH "LF" SUFFIX MEETS EURPOEAN UNIONDIRECTIVES AND OTHER COUNTRY REGULATIONS AS DESCRIBED IN GS –22–008.

4) THE HOUSING WILL WITHSTAND EXPROSURE TO 260 DEGREE PEAK TEMPERATURE FOR 10 SECONDS IN A WAVE SOLDER APPLICATION WITH A 1.6mm MINIMUM THICK CIRCUIT BOARD.

mat'l. code SEE NOTE 1.				tolerances unless otherwise specified			CUSTOMER COPY	FCI ELECTRONICS www.fcicconnect.com
ltr	ecn no	dr	date					
A	H10290	DAN	910912	linear			projection	title MINI COAX S.T. MALE CONNECTOR
B	H10402	DAN	911229					
C	H20755	DAN	921124	angles				
D	H40801	RVI	941208	dr	D Andrews	910912	mm	product family VETRAL(tm) code 213
E	H90489	HME	990816	engr	D Andrews	941208		
F	DG05–0357	CLu	050927	chr	A v Zanten	910912	scale 5:1	size A2 dwg no 70243 sheet 1 of 1
				appd	H v Woensel	910912		
sheet index	revision sheet	F 1						

PDM: Rev.F STATUS: Released Printed: May 19, 2011

Tous droits strictement reservés. Reproduction ou communication a des tiers interdites sauf autorisation écrite du propriétaire. Propriété de F C I b.v.
©F C I b.v.
All rights strictly reserved. Reproduction or issue to third parties in any form whatsoever is not permitted without written authority from the proprietor. Property of F C I b.v.
©F C I b.v.

form: A2