Chipsmall Limited consists of a professional team with an average of over 10 year of expertise in the distribution of electronic components. Based in Hongkong, we have already established firm and mutual-benefit business relationships with customers from,Europe,America and south Asia,supplying obsolete and hard-to-find components to meet their specific needs.

With the principle of “Quality Parts,Customers Priority,Honest Operation,and Considerate Service”,our business mainly focus on the distribution of electronic components. Line cards we deal with include Microchip,ALPS,ROHM,Xilinx,Pulse,ON,Everlight and Freescale. Main products comprise IC,Modules,Potentiometer,IC Socket,Relay,Connector.Our parts cover such applications as commercial,industrial, and automotives areas.

We are looking forward to setting up business relationship with you and hope to provide you with the best service and solution. Let us make a better world for our industry!

Contact us

Tel: +86-755-8981 8866 Fax: +86-755-8427 6832
Email & Skype: info@chipsmall.com Web: www.chipsmall.com
Address: A1208, Overseas Decoration Building, #122 Zhenhua RD., Futian, Shenzhen, China

1.8V CONFIGURABLE BUFFER WITH ADDRESS-PARITY TEST

IDT74SSTU32866B

FEATURES:

- **1.8V Operation**
- **SSTL_18 style clock and data inputs**
- **Differential CLK input**
- **Configurable as 25-bit 1:1 or 14-bit 1:2 registered buffer**
- **Control inputs compatible with LVCMOS levels**
- **Flow-through architecture for optimum PCB design**
- **Latch-up performance exceeds 100mA**
- **ESD >2000V per MIL-STD-883, Method 3015; >200V using machine model (C = 200pF, R = 0)**
- **Checks parity on data inputs**
- **Available in 96-pin LFBGA package**

APPLICATIONS:

- **Along with CSPU877/A/D DDR2-400 PLL, provides complete solution for DDR2-400/533 DIMMs**
- **Optimized for DDR2-400/533 (PC2-3200/4300) JEDEC Raw Cards E, F, and G**

DESCRIPTION:

This 25-bit 1:1 / 14-bit 1:2 configurable registered buffer is designed for 1.7V to 1.9V V_{DD} operation. In the 1:1 pinout configuration, only one device per DIMM is requred to drive nine SDRAM loads. In the 1:2 pinout configuration, two devices per DIMM are required to drive eighteen SDRAM loads. All inputs are SSTL_18, except reset ($\overline{RESET}$) and control (Cn) inputs, which are LVCMOS. All outputs are edge-controlled circuits optimized for unterminated DIMM loads, and meet SSTL_18 specifications, except the open-drain error ($\overline{QERR}$) output.

The SSTU32866B operates from a differential clock (CLK and $\overline{CLK}$). Data are registered at the crossing of CLK going high and $\overline{CLK}$ going low. Parity is checked on the parity bit (PAR_IN) input which arrives one cycle after the input data to which it applies. The $\overline{QERR}$ output is open drain.

When used as a single device, the C0 and C1 inputs are tied low. In this configuration, the partial-parity-out (PPO) and $\overline{QERR}$ signals are produced two clock cycles after the corresponding data output.

When used in pairs, the C0 input of the first register is tied low and the C0 input of the second register is tied high. The C1 input of both registers are tied high. The $\overline{QERR}$ output of the first SSTU32866B is left floating and the valid error information is latched on the $\overline{QERR}$ output of the second SSTU32866B.

If an error occurs and the $\overline{QERR}$ output is driven low, it stays latched low for two clock cycles or until $\overline{RESET}$ is driven low. The DIMM-dependent signals (DODT, DCKE, $\overline{DCS}$, and $\overline{CSR}$) are not included in the parity check.

The CO input controls the pinout configuration of the 1:2 pinout from register A configuration (when low) to register B configuration (when high). The C1 input controls the pinout configurationfrom 25-bit 1:1 (when low) to 14-bit 1:2 (when high). C0 and C1 should not be switched during normal operation. They should be hard-wired to a valid low or high level to configure the register in the desired mode. In the 25-bit 1:1 pinout configuration, the A6, D6, and H6 terminals are driven low and should not be used.

The device supports low-power standby operation. When $\overline{RESET}$ is low, the differential input recievers are disabled, and undriven (floating) data, clock, and reference voltage (V_{REF}) inputs are allowed. In addition, when $\overline{RESET}$ is low, all registers are reset and all outputs except $\overline{QERR}$ are forced low. The LVCMOS $\overline{RESET}$ and Cn inputs always must be held at a valid logic high or low level.

There are two V_{REF} pins (A3 and T3). However, it is necessary to only connect one of the two V_{REF} pins to the external V_{REF} power supply. An unused V_{REF} pin should be terminated with a V_{REF} coupling capacitor.

The device also supports low-power active operation by monitoring both system chip select ($\overline{DCS}$ and $\overline{CSR}$) inputs and will gate the Qn and PPO outputs from changing states when both $\overline{DCS}$ and $\overline{CSR}$ inputs are high. If either $\overline{DCS}$ or $\overline{CSR}$ input is low, the Qn and PPO outputs will function normally. Also, if the internal low power signal ($\overline{LPS1}$) is high, the device will gate the $\overline{QERR}$ output from changing states. If $\overline{LPS1}$ is low, the $\overline{QERR}$ output will function normally. The $\overline{RESET}$ input has priority over the $\overline{DCS}$ and $\overline{CSR}$ control and when driven low will force the Qn and PPO outputs low, and the $\overline{QERR}$ output high. If the $\overline{DCS}$ control functionality is not desired, then the $\overline{CSR}$ input can be hard-wired to ground, in which case the setup-time requirement for $\overline{DCS}$ would be the same as for the other D data inputs. To control the low-power mode with $\overline{DCS}$ only, then the $\overline{CSR}$ input should be pulled up to V_{DD} through a pullup resistor.

To ensure defined outputs from the register before a stable clock has been supplied, $\overline{RESET}$ must be held in the low state during power up.

The IDT logo is a registered trademark of Integrated Device Technology, Inc.

© 2005 Integrated Device Technology, Inc.

FUNCTIONAL BLOCK DIAGRAM (1:2) - A CONFIGURATION (POSITIVE LOGIC)

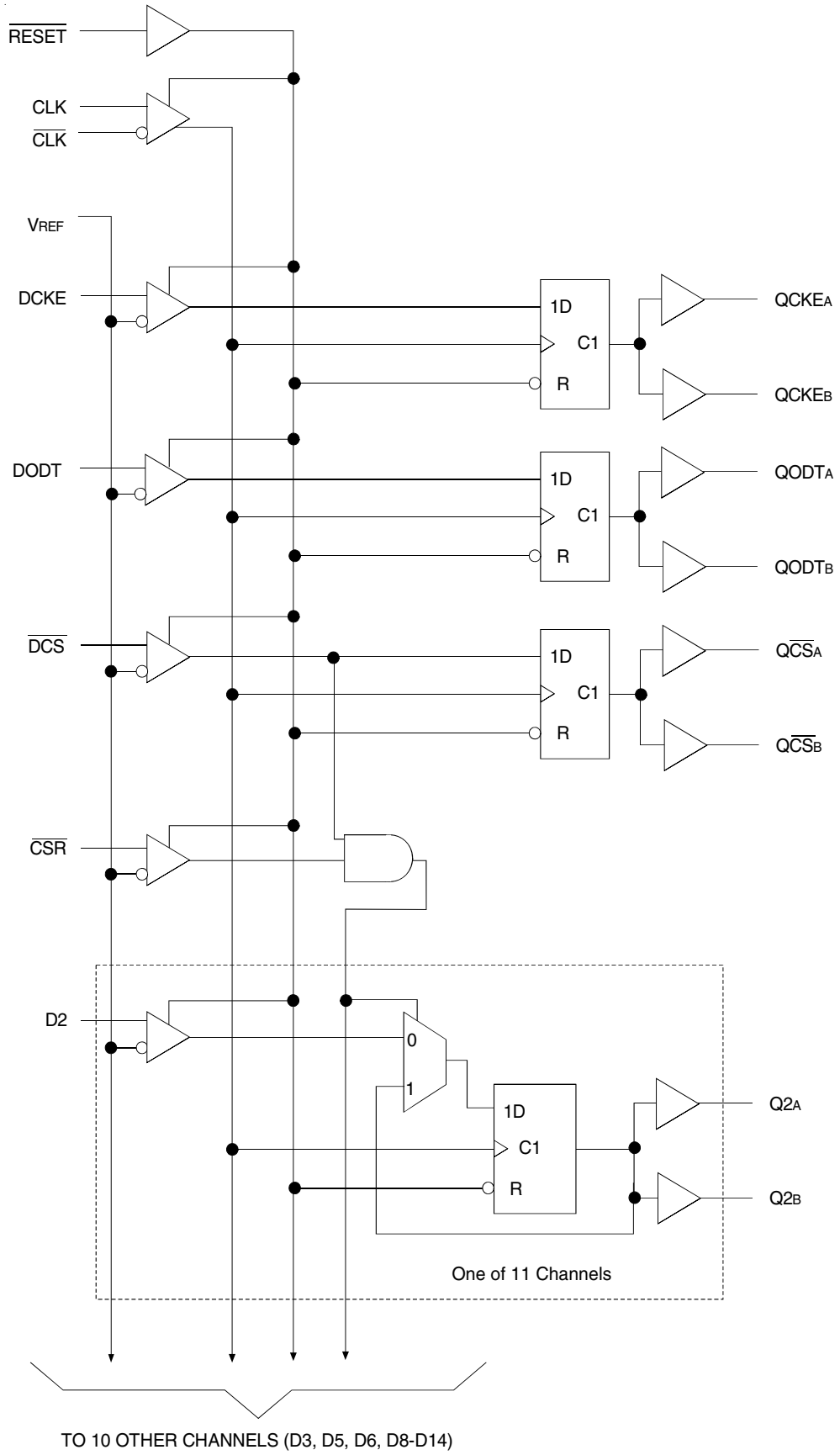

FUNCTIONAL BLOCK DIAGRAM (1:2) - B CONFIGURATION (POSITIVE LOGIC)

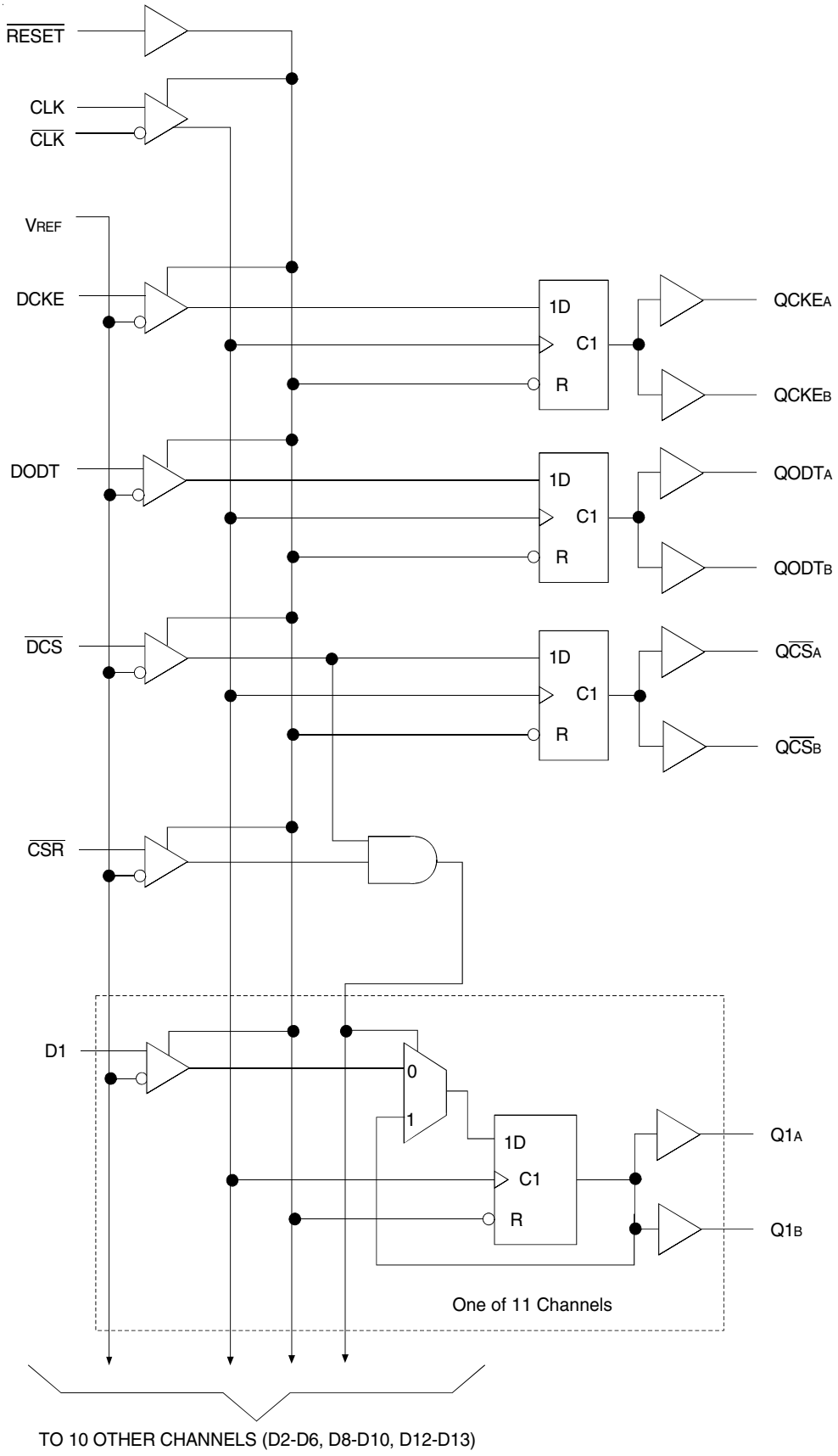

PIN CONFIGURATION (TYPE A)

6	QCKEB	Q2B	Q3B	QODTB	Q5B	Q6B	C0	$Q\overline{CS}B$	NC	Q8B	Q9B	Q10B	Q11B	Q12B	Q13B	Q14B
5	QCKEA	Q2A	Q3A	QODTA	Q5A	Q6A	C1	$Q\overline{CS}A$	NC	Q8A	Q9A	Q10A	Q11A	Q12A	Q13A	Q14A
4	V_{DD}	GND	V_{DD}	GND	V_{DD}	GND	V_{DD}	GND	V_{DD}	GND	V_{DD}	GND	V_{DD}	GND	V_{DD}	V_{DD}
3	V_{REF}	GND	V_{DD}	GND	V_{DD}	GND	V_{DD}	GND	V_{DD}	GND	V_{DD}	GND	V_{DD}	GND	V_{DD}	V_{REF}
2	PPO	DNU	DNU	$\overline{QERR}$	DNU	DNU	$\overline{RESET}$	$\overline{DCS}$	$\overline{CSR}$	DNU	DNU	DNU	DNU	DNU	DNU	DNU
1	DCKE	D2	D3	DODT	D5	D6	PAR_IN	CLK	$\overline{CLK}$	D8	D9	D10	D11	D12	D13	D14
	A	B	C	D	E	F	G	H	J	K	L	M	N	P	R	T

96-PIN LFBGA
1:2 REGISTER (TYPE A, FRONTSIDE)
TOP VIEW

PIN CONFIGURATION (TYPE B)

6	Q1B	Q2B	Q3B	Q4B	Q5B	Q6B	C0	$Q\overline{CS}B$	NC	Q8B	Q9B	Q10B	QODTB	Q12B	Q13B	QCKEB
5	Q1A	Q2A	Q3A	Q4A	Q5A	Q6A	C1	$Q\overline{CS}A$	NC	Q8A	Q9A	Q10A	QODTA	Q12A	Q13A	QCKEA
4	V_{DD}	GND	V_{DD}	GND	V_{DD}	GND	V_{DD}	GND	V_{DD}	GND	V_{DD}	GND	V_{DD}	GND	V_{DD}	V_{DD}
3	V_{REF}	GND	V_{DD}	GND	V_{DD}	GND	V_{DD}	GND	V_{DD}	GND	V_{DD}	GND	V_{DD}	GND	V_{DD}	V_{REF}
2	PPO	DNU	DNU	$\overline{QERR}$	DNU	DNU	$\overline{RESET}$	$\overline{DCS}$	$\overline{CSR}$	DNU	DNU	DNU	DNU	DNU	DNU	DNU
1	D1	D2	D3	D4	D5	D6	PAR_IN	CLK	$\overline{CLK}$	D8	D9	D10	DODT	D12	D13	DCKE
	A	B	C	D	E	F	G	H	J	K	L	M	N	P	R	T

96-PIN LFBGA
1:2 REGISTER (TYPE B, BACKSIDE)
TOP VIEW

FUNCTIONAL BLOCK DIAGRAM (1:1)

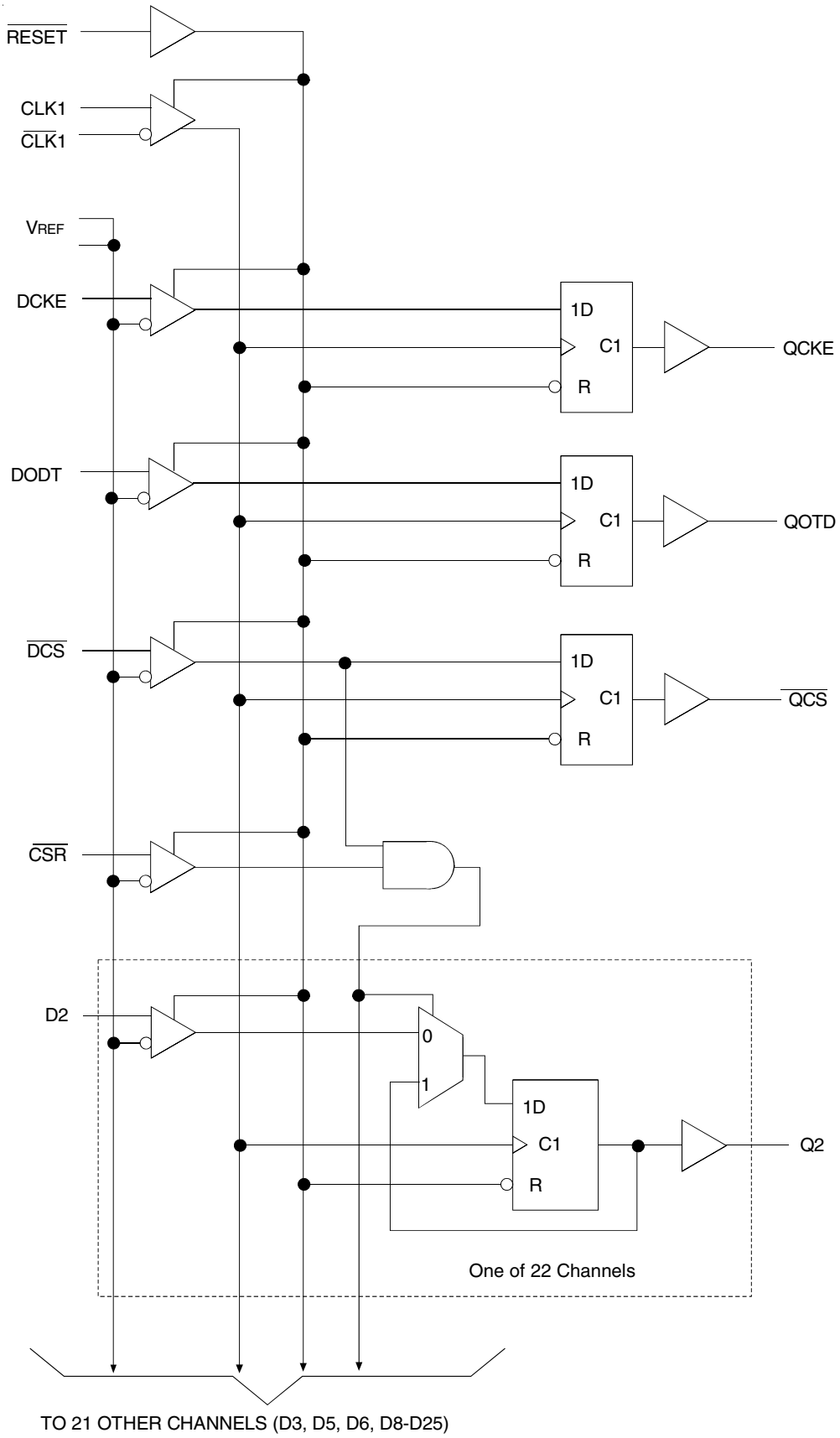

PIN CONFIGURATION

	A	B	C	D	E	F	G	H	J	K	L	M	N	P	R	T
6	DNU	Q15	Q16	DNU	Q17	Q18	C0	DNU	NC	Q19	Q20	Q21	Q22	Q23	Q24	Q25
5	QCKE	Q2	Q3	QODT	Q5	Q6	C1	$\overline{QCS}$	NC	Q8	Q9	Q10	Q11	Q12	Q13	Q14
4	VDD	GND	VDD	GND	VDD	GND	VDD	GND	VDD	GND	VDD	GND	VDD	GND	VDD	VDD
3	VREF	GND	VDD	GND	VDD	GND	VDD	GND	VDD	GND	VDD	GND	VDD	GND	VDD	VREF
2	PPO	D15	D16	$\overline{QERR}$	D17	D18	$\overline{RESET}$	$\overline{DCS}$	$\overline{CSR}$	D19	D20	D21	D22	D23	D24	D25
1	DCKE	D2	D3	DODT	D5	D6	PAR_IN	CLK	$\overline{CLK}$	D8	D9	D10	D11	D12	D13	D14

*Rows 3 and 4 are reserved for VDD and GND.

96-PIN LFBGA
1:1 REGISTER
TOP VIEW

96 BALL LFBGA PACKAGE ATTRIBUTES

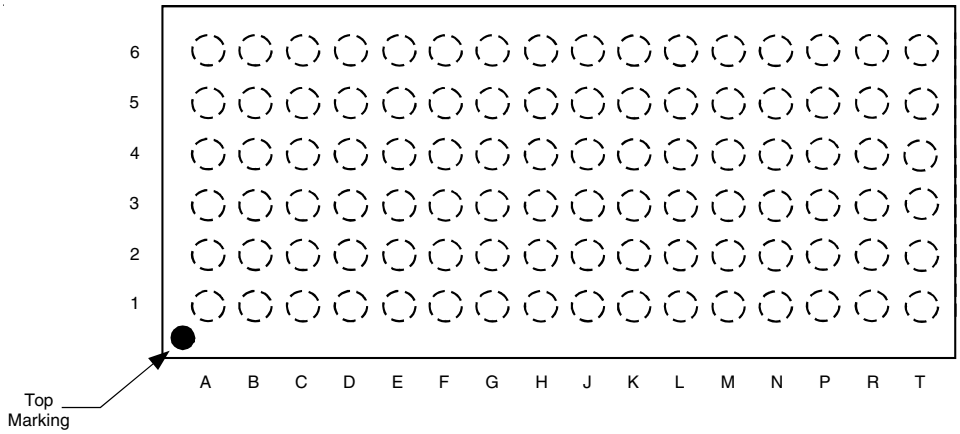

TOP VIEW

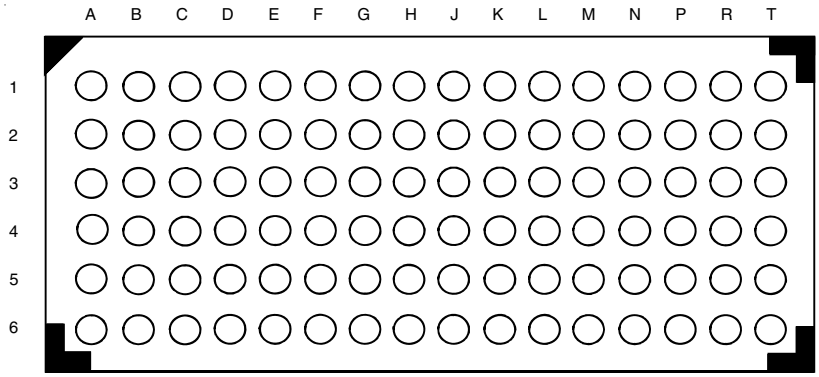

BOTTOM VIEW

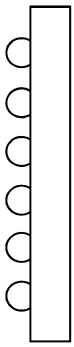

SIDE VIEW

FUNCTION TABLE (EACH FLIP-FLOP) (1)

Inputs						Qx	$Q\overline{CS}x$	QODTx, QCKEx
$\overline{RESET}$	$\overline{DCS}$	$\overline{CSR}$	CLK	$\overline{CLK}$	Dx, DODT, DCKE	Outputs	Output	Outputs
H	L	L	↑	↓	L	L	L	L
H	L	L	↑	↓	H	H	L	H
H	L	L	L or H	L or H	X	Q_0(2)	Q_0(2)	Q_0(2)
H	L	H	↑	↓	L	L	L	L
H	L	H	↑	↓	H	H	L	H
H	L	H	L or H	L or H	X	Q_0(2)	Q_0(2)	Q_0(2)
H	H	L	↑	↓	L	L	H	L
H	H	L	↑	↓	H	H	H	H
H	H	L	L or H	L or H	X	Q_0(2)	Q_0(2)	Q_0(2)
H	H	H	↑	↓	L	Q_0(2)	H	L
H	H	H	↑	↓	H	Q_0(2)	H	H
H	H	H	L or H	L or H	X	Q_0(2)	Q_0(2)	Q_0(2)
L	X or Floating	X or Floating	X or Floating	X or Floating	X or Floating	L	L	L

NOTES:
1. H = HIGH Voltage Level
   L = LOW Voltage Level
   X = Don't Care
   ↑ = LOW to HIGH
   ↓ = HIGH to LOW
2. Output level before the indicated steady-state conditions were established.

PARITY AND STANDBY FUNCTION TABLE(1)

Inputs							Outputs	
$\overline{RESET}$	$\overline{DCS}$	$\overline{CSR}$	CLK	$\overline{CLK}$	Σ of Inputs = H (D1 - D25)	PAR_IN(2)	PPO(3)	$\overline{QERR}$(4)
H	L	X	↑	↓	Even	L	L	H
H	L	X	↑	↓	Odd	L	H	L
H	L	X	↑	↓	Even	H	H	L
H	L	X	↑	↓	Odd	H	L	H
H	H	L	↑	↓	Even	L	L	H
H	H	L	↑	↓	Odd	L	H	L
H	H	L	↑	↓	Even	H	H	L
H	H	L	↑	↓	Odd	H	L	H
H	H	H	↑	↓	X	X	PPO_0	$\overline{QERR}_0$
H	X	X	L or H	L or H	X	X	PPO_0	$\overline{QERR}_0$
L	X or Floating	X or Floating	X or Floating	X or Floating	X or Floating	X or Floating	L	H

NOTES:
1. H = HIGH Voltage Level
   L = LOW Voltage Level
   X = Don't Care
   ↑ = LOW to HIGH
   ↓ = HIGH to LOW
2. Data Inputs = D2, D3, D5, D6, D8 - D25 when C0 = 0 and C1 = 0.
   Data Inputs = D2, D3, D5, D6, D8 - D14 when C0 = 0 and C1 = 1.
   Data Inputs = D1 - D6, D8 - D10, D12, D13 when C0 = 1 and C1 = 1.
3. PAR_IN arrives one clock cycle (C0 = 0), or two clock cycles (C0 = 1), after the data to which it applies.
4. This transition assumes $\overline{QERR}$ is HIGH at the crossing of CLK going HIGH and $\overline{CLK}$ going LOW. If $\overline{QERR}$ is LOW, it stays latched LOW for two clock cycles or until $\overline{RESET}$ is driven LOW.

LOGIC DIAGRAM (1:1)

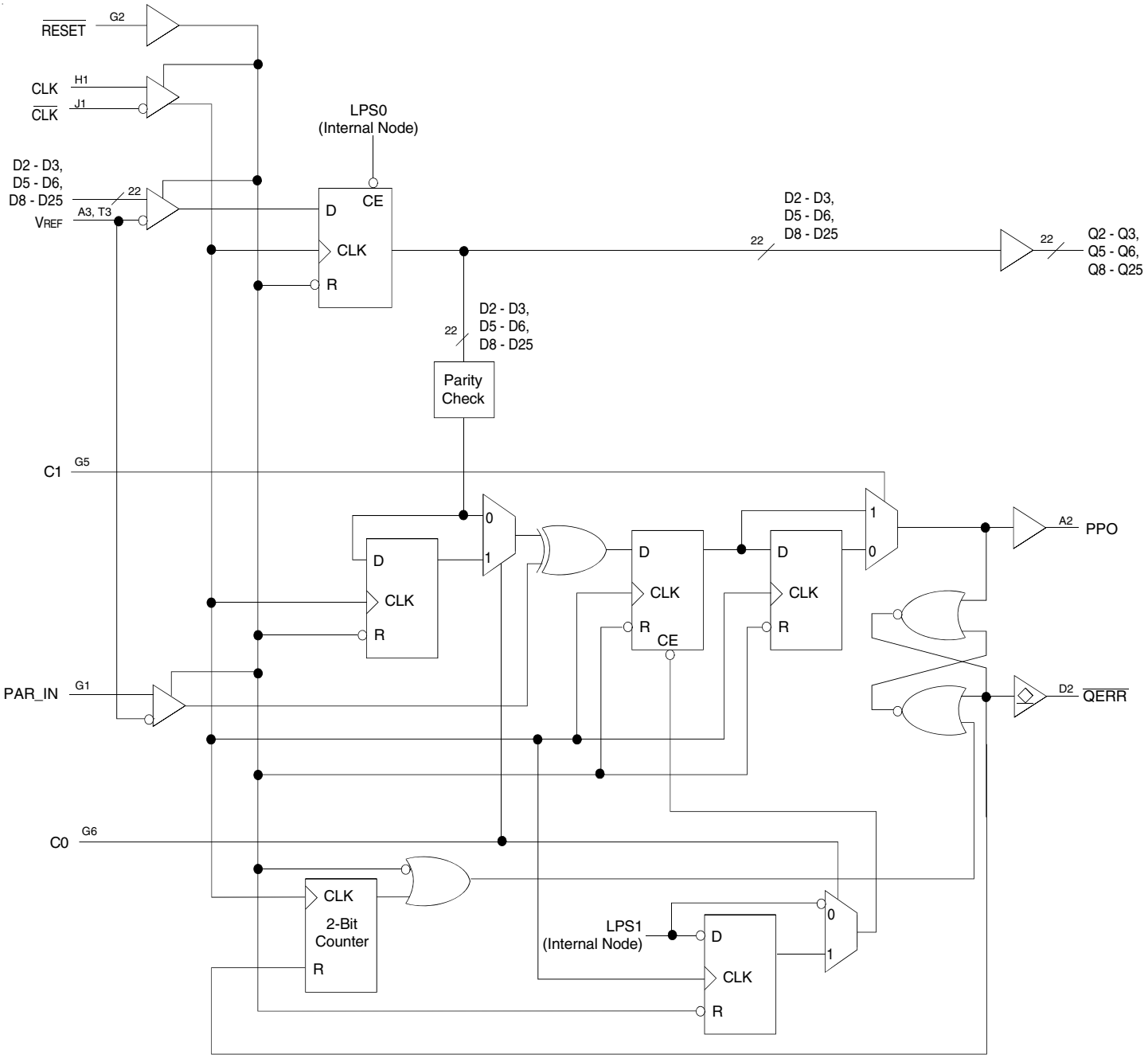

Parity Logic Diagram for 1:1 Register - A Configuration (Positive Logic); C0 = 0, C1 = 0

LOGIC DIAGRAM (1:2)

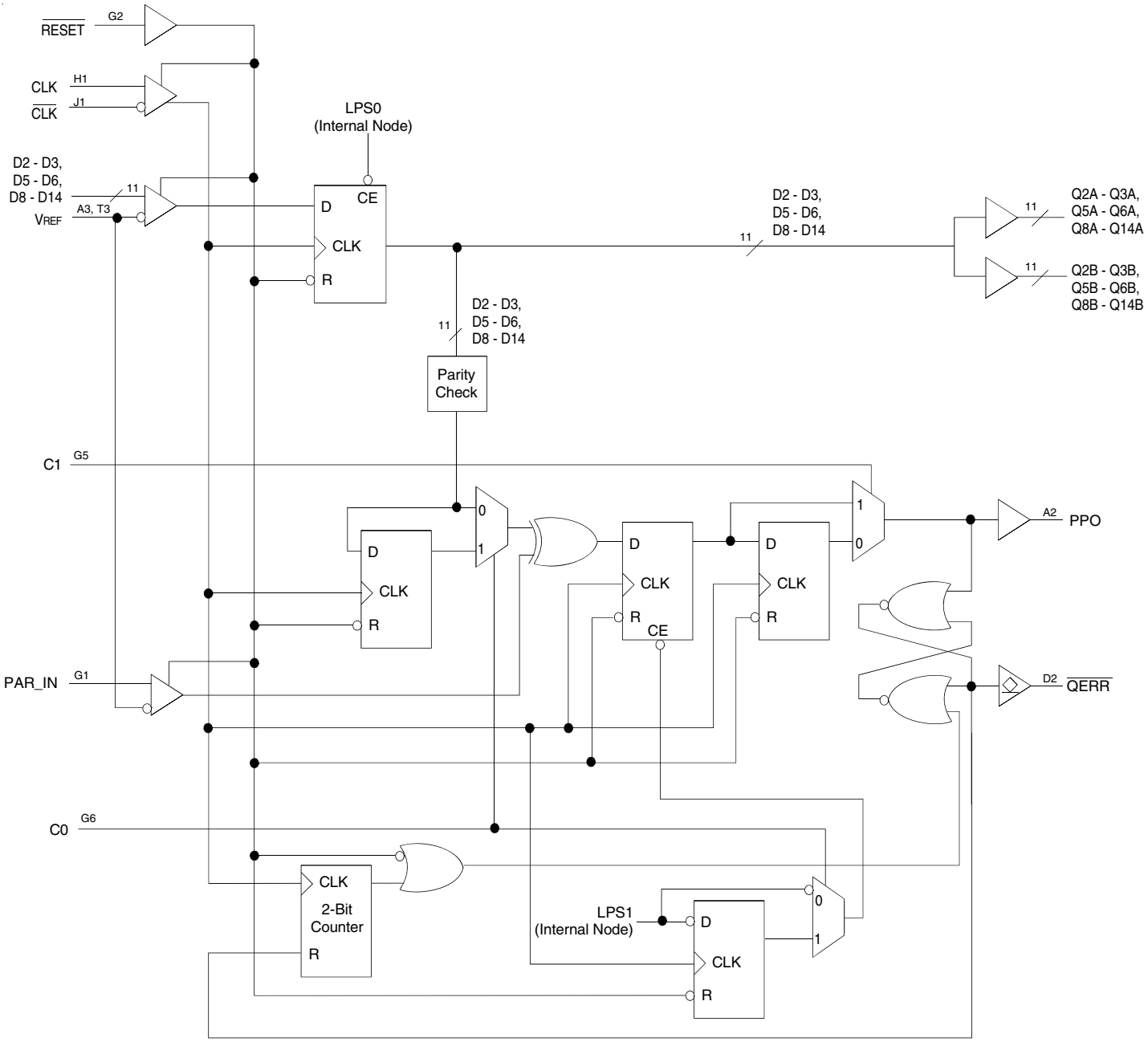

Parity Logic Diagram for 1:2 Register - A Configuration (Positive Logic); C0 = 0, C1 = 1

ABSOLUTE MAXIMUM RATINGS (1)

Symbol	Description		Max.	Unit
V_{DD}	Supply Voltage Range		–0.5 to 2.5	V
V_I(2,3)	Input Voltage Range		–0.5 to 2.5	V
V_O(2,3)	Output Voltage Range		–0.5 to V_{DD} +0.5	V
I_{IK}	Input Clamp Current	V_I < 0	±50	mA
		V_I > V_{DD}		
I_{OK}	Output Clamp Current	V_O < 0	±50	mA
		V_O > V_{DD}		
I_O	Continuous Output Current, V_O = 0 to V_{DD}		±50	mA
V_{DD}	Continuous Current through each V_{DD} or GND		±100	mA
T_{STG}	Storage Temperature Range		–65 to +150	° C

NOTES:
1. Stresses greater than those listed under ABSOLUTE MAXIMUM RATINGS may cause permanent damage to the device. This is a stress rating only and functional operation of the device at these or any other conditions above those indicated in the operational sections of this specification is not implied. Exposure to absolute maximum rating conditions for extended periods may affect reliability.
2. The input and output negative voltage ratings may be exceeded if the ratings of the I/P and O/P clamp current are observed.
3. This value is limited to 2.5V maximum.

MODE SELECT

C_0	C_1	Device Mode
0	0	1:1 25-bit to 25-bit
0	1	1:2 14-bit to 28-bit, Front (Type A)
1	0	Reserved
1	1	1:2 14-bit to 28-bit, Back (Type B)

TERMINAL FUNCTIONS (ALL PINS)

Terminal Name	Electrical Characteristics	Description
GND	Ground Input	Ground
V_{DD}	1.8V nominal	Power Supply Voltage
V_{REF}	0.9V nominal	Input Reference Voltage
CLK	Differential Input	Positive Master Clock Input
$\overline{CLK}$	Differential Input	Negative Master Clock Input
C x	LVCMOS Input	Configuration Control Inputs
$\overline{RESET}$	LVCMOS Input	Asynchronous Reset Input. Resets registers and disables V_{REF} data and clock differential-input receivers.
$\overline{CSR}$, $\overline{DCS}$	SSTL_18 Input	Chip Select Inputs. Disables outputs Dx switching when both inputs are HIGH.
D x	SSTL_18 Input	Data Input. Clocked in on the crossing of the rising edge of CLK and the falling edge of $\overline{CLK}$.
DODT	SSTL_18 Input	The outputs of this register bit will not be suspended by the $\overline{DCS}$ and $\overline{CSR}$ controls
DCKE	SSTL_18 Input	The outputs of this register bit will not be suspended by the $\overline{DCS}$ and $\overline{CSR}$ controls
Q x	1.8V CMOS	Data Outputs that are suspended by the $\overline{DCS}$ and $\overline{CSR}$ controls
$\overline{QCS}$x	1.8V CMOS	Data Output that will not be suspended by the $\overline{DCS}$ and $\overline{CSR}$ controls
QODTx	1.8V CMOS	Data Output that will not be suspended by the $\overline{DCS}$ and $\overline{CSR}$ controls
QCKEx	1.8V CMOS	Data Output that will not be suspended by the $\overline{DCS}$ and $\overline{CSR}$ controls
PAR_IN	SSTL_18 Input	Parity Input. Clocked on the rising edge of CLK one cycle after corresponding data input.
$\overline{QERR}$	Open Drain Output	Output Error bit, generated one cycle after the corresponding data output
PPO	1.8V CMOS	Partial Parity Output. Indicates ODD parity of Data Inputs and Parity In.

OPERATING CHARACTERISTICS, T_A = 25ºC (1,2)

Symbol	Parameter		Min.	Typ.	Max.	Unit
V_{DD}	Supply Voltage		1.7	—	1.9	V
V_{REF}	Reference Voltage		0.49 * V_{DD}	0.5 * V_{DD}	0.51 * V_{DD}	V
V_{TT}	Termination Voltage		V_{REF}– 40mV	V_{REF}	V_{REF}+ 40mV	V
V_I	Input Voltage		0	—	V_{DD}	V
V_{IH}	AC High-Level Input Voltage	Data Inputs, $\overline{CSR}$, $\overline{DCS}$, PAR_IN	V_{REF}+ 250mV	—	—	V
V_{IL}	AC Low-Level Input Voltage		—	—	V_{REF}– 250mV	
V_{IH}	DC High-Level Input Voltage		V_{REF}+ 125mV	—	—	
V_{IL}	DC Low-Level Input Voltage		—	—	V_{REF}– 125mV	
V_{IH}	High-Level Input Voltage	$\overline{RESET}$, Cx	0.65 * V_{DD}	—	—	V
V_{IL}	Low-Level Input Voltage	$\overline{RESET}$, Cx	—	—	0.35 * V_{DD}	V
V_{ICR}	Common Mode Input Voltage	CLK, $\overline{CLK}$	0.675	—	1.125	V
V_{ID}	Differential Input Voltage	CLK, $\overline{CLK}$	600	—	—	mV
I_{OH}	High-Level Output Current	Data Outputs, PPO	—	—	–8	mA
I_{OL}	Low-Level Output Current	Data Outputs, PPO, $\overline{QERR}$	—	—	8	
T_A	Operating Free-Air Temperature		0	—	70	°C

NOTES:
1. The $\overline{RESET}$ and Cx inputs of the device must be held at valid levels (not floating) to ensure proper device operation.
2. The differential inputs must not be floating unless $\overline{RESET}$ is LOW.

DC ELECTRICAL CHARACTERISTICS OVER OPERATING RANGE

Following Conditions Apply Unless Otherwise Specified:
Operating Condition: T_A = 0°C to +70°C, V_{DD} = 1.8V ±0.1V

Symbol	Parameter	Test Conditions		Min.	Typ.	Max.	Unit
V_{OH}	Output HIGH Voltage	I_{OH} = –6 mA		1.2	—	—	V
V_{OL}	Output LOW Voltage	I_{OL} = 6 mA		—	—	0.5	V
I_I	All Inputs(1)	V_I = V_{DD} or GND		—	—	±5	µA
I_{DD}	Static Standby	I_O = 0, V_{DD} = 1.9V, $\overline{RESET}$ = GND		—	—	100	µA
	Static Operating	I_O = 0, V_{DD} = 1.9V, $\overline{RESET}$ = V_{DD}, V_I = $V_{IH\ (AC)}$ or $V_{IL\ (AC)}$		—	—	40	mA
I_{DDD}	Dynamic Operating (Clock Only)	I_O = 0, V_{DD} = 1.8V, $\overline{RESET}$ = V_{DD}, V_I = $V_{IH\ (AC)}$ or $V_{IL\ (AC)}$, CLK and $\overline{CLK}$ Switching 50% Duty Cycle.		—	—	—	µA/Clock MHz
	Dynamic Operating (Per Each Data Input)	I_O = 0, V_{DD} = 1.8V, $\overline{RESET}$ = V_{DD}, V_I = $V_{IH\ (AC)}$ or $V_{IL\ (AC)}$, CLK and $\overline{CLK}$ Switching at 50% Duty Cycle. One Data Input Switching at Half Clock Frequency, 50% Duty Cycle.	1:1 Mode	—	—	—	µA/Clock MHz/Data Input
			1:2 Mode	—	—	—	
C_I	Data Inputs, $\overline{CSR}$, PAR_IN			2.5	—	3.5	pF
	CLK and $\overline{CLK}$	V_{ICR} = 0.9V, V_{ID} = 600mV		2	—	3	
	$\overline{RESET}$	V_I = V_{DD} or GND		—	—	—	

NOTE:
1. Each V_{REF} pin (A3, T3) should be tested independently, with the other pin open circuit.

TIMING REQUIREMENTS OVER RECOMMENDED OPERATING FREE-AIR TEMPERATURE RANGE

Symbol	Parameter		V_{DD} = 1.8V ± 0.1V Min.	Max.	Unit
f_{CLOCK}	Clock Frequency		—	270	MHz
t_W	Pulse Duration, CLK, $\overline{CLK}$ HIGH or LOW		1	—	ns
t_{ACT}(1,2)	Differential Inputs Active Time		—	10	ns
t_{INACT}(1,3)	Differential Inputs Inactive Time		—	15	ns
t_{SU}	Setup Time	$\overline{DCS}$ before CLK↑, $\overline{CLK}$↓, $\overline{CSR}$ HIGH; $\overline{CSR}$ before CLK↑, $\overline{CLK}$↓, $\overline{DCS}$ HIGH	0.7	—	ns
		$\overline{DCS}$ before CLK↑, $\overline{CLK}$↓, $\overline{CSR}$ LOW	0.5	—	
		DODT, DCKE, and data before CLK↑, $\overline{CLK}$↓	0.5	—	
		PAR_IN before CLK↑, $\overline{CLK}$↓	0.5	—	
t_H	Hold Time	$\overline{DCS}$, DODT, DCKE, and data after CLK↑, $\overline{CLK}$↓	0.5	—	ns
		PAR_IN after CLK↑, $\overline{CLK}$↓	0.5	—	

NOTES:
1. This parameter is not production tested.
2. Data and V_{REF} inputs must be low a minimum time of t_{ACT} max, after $\overline{RESET}$ is taken HIGH.
3. Data, V_{REF}, and clock inputs must be held at valid levels (not floating) a minimum time of t_{INACT} max, after $\overline{RESET}$ is taken LOW.

SWITCHING CHARACTERISTICS OVER RECOMMENDED FREE-AIR OPERATING RANGE (UNLESS OTHERWISE NOTED) (1)

Symbol	Parameter	V_{DD} = 1.8V ± 0.1V Min	Max.	Unit
f_{MAX}		270	—	MHz
t_{PDM}(2)	CLK and $\overline{CLK}$ to Q	1.41	2.15	ns
t_{PDMSS}(2,3)	CLK and $\overline{CLK}$ to Q (simultaneous switching)	—	2.35	ns
t_{RPHL}	$\overline{RESET}$ to Q	—	3	ns
dV/dt_r	Output slew rate from 20% to 80%	1	4	V/ns
dV/dt_f	Output slew rate from 20% to 80%	1	4	V/ns
dV/dt_Δ(4)	Output slew rate from 20% to 80%	—	1	V/ns
t_{PD}	CLK and $\overline{CLK}$ to PPO	0.5(5)	1.8(5)	ns
t_{PLH}	CLK and $\overline{CLK}$ to QERR	1.2(5)	3(5)	ns
t_{PHL}	CLK and $\overline{CLK}$ to QERR	1(5)	2.4(5)	ns
t_{RPHL}	$\overline{RESET}$ to PPO	—	3	ns
t_{RPLH}	$\overline{RESET}$ to QERR	—	3	ns

NOTES:
1. See TEST CIRCUITS AND WAVEFORMS.
2. Includes 350ps of test load transmission line delay.
3. This parameter is not production tested.
4. Difference between dV/dt_r (rising edge rate) and dV/dt_f (falling edge rate).
5. For reference only. Final values to be determined.

REGISTER TIMING

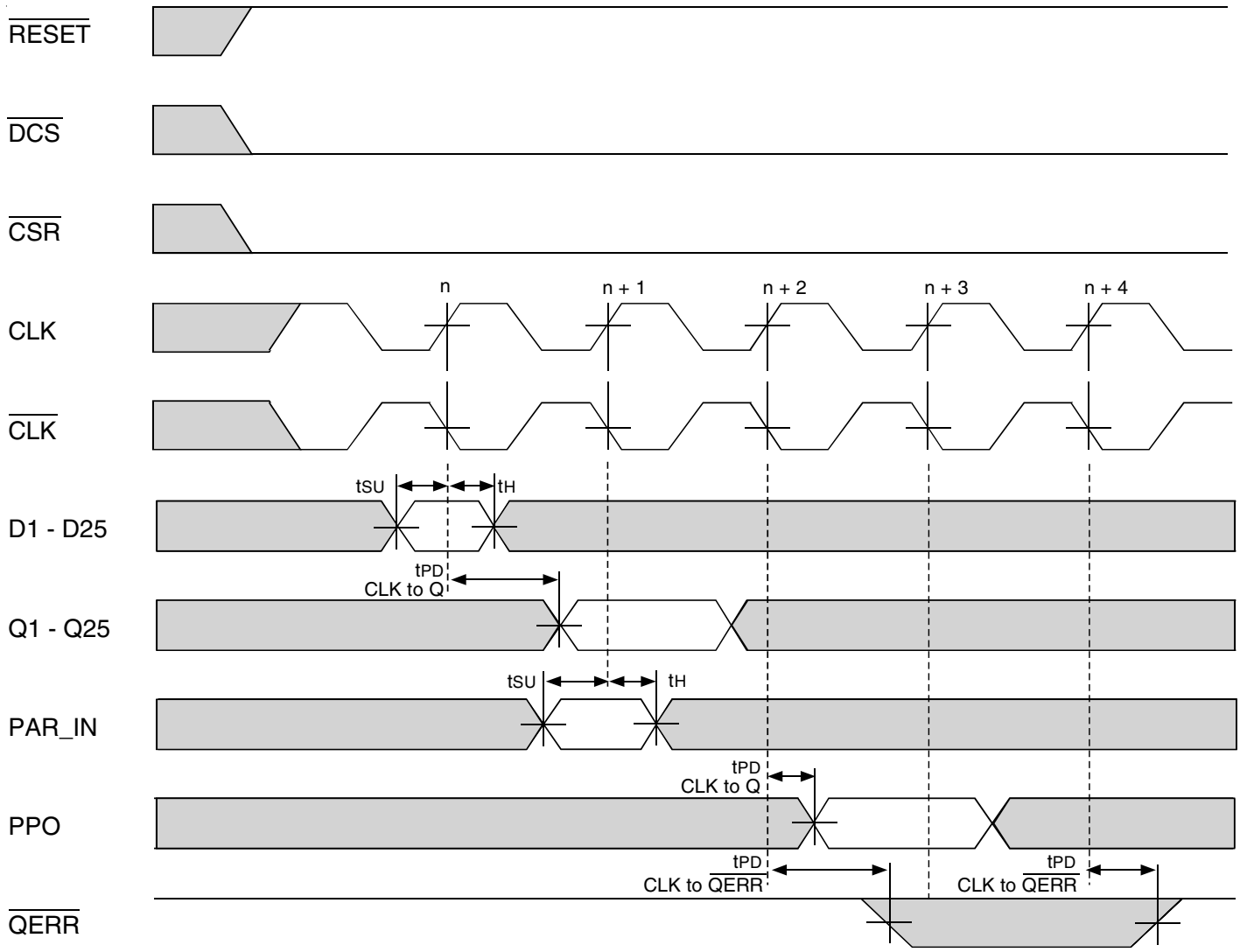

Timing Diagram for SSTU32866B Used as a Single Device; C0 = 0, C1 = 0

REGISTER TIMING

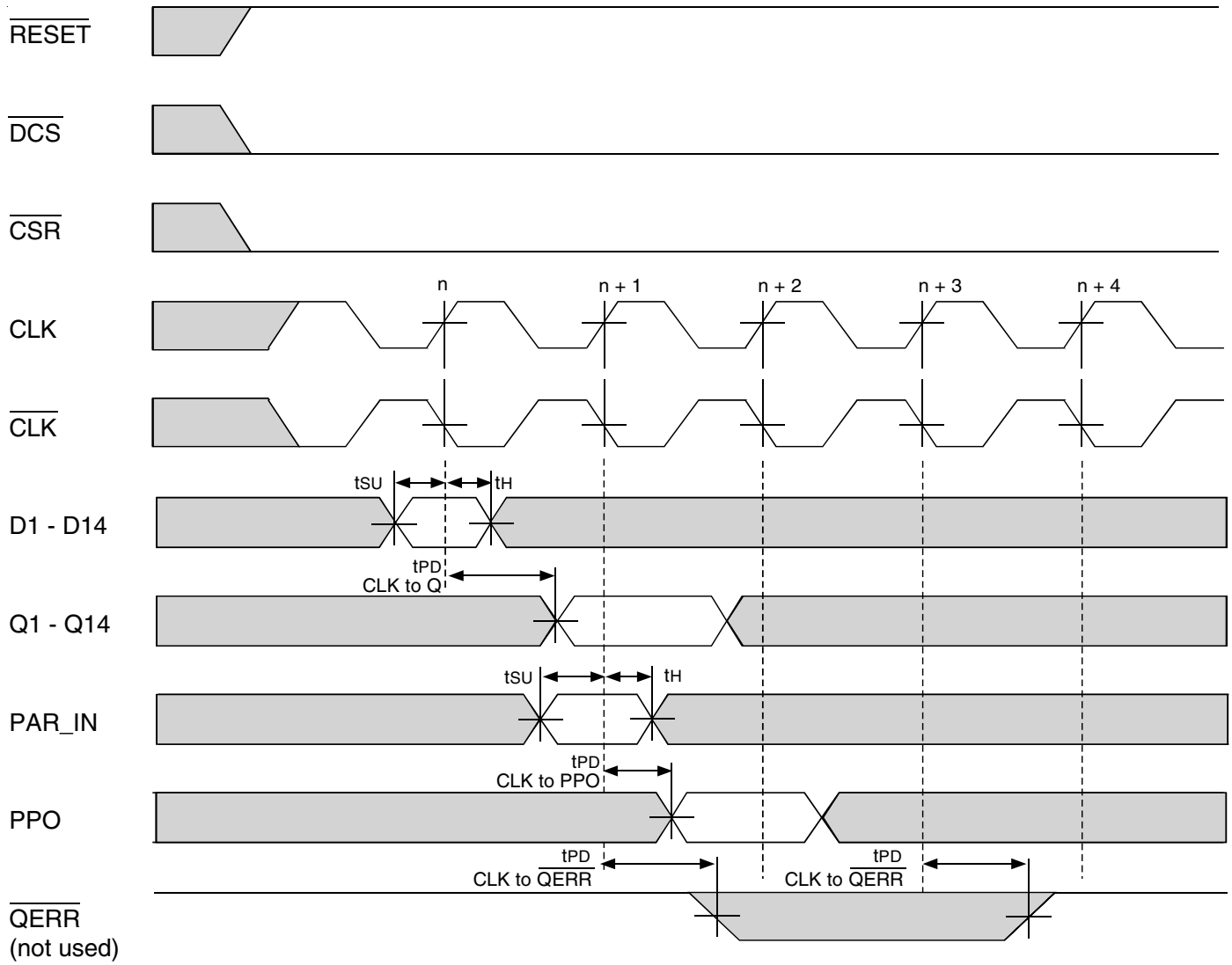

Timing Diagram for the First SSTU32866B (1:2 Register-A Configuration) Device Used in a Pair; C0 = 0, C1 = 1

REGISTER TIMING

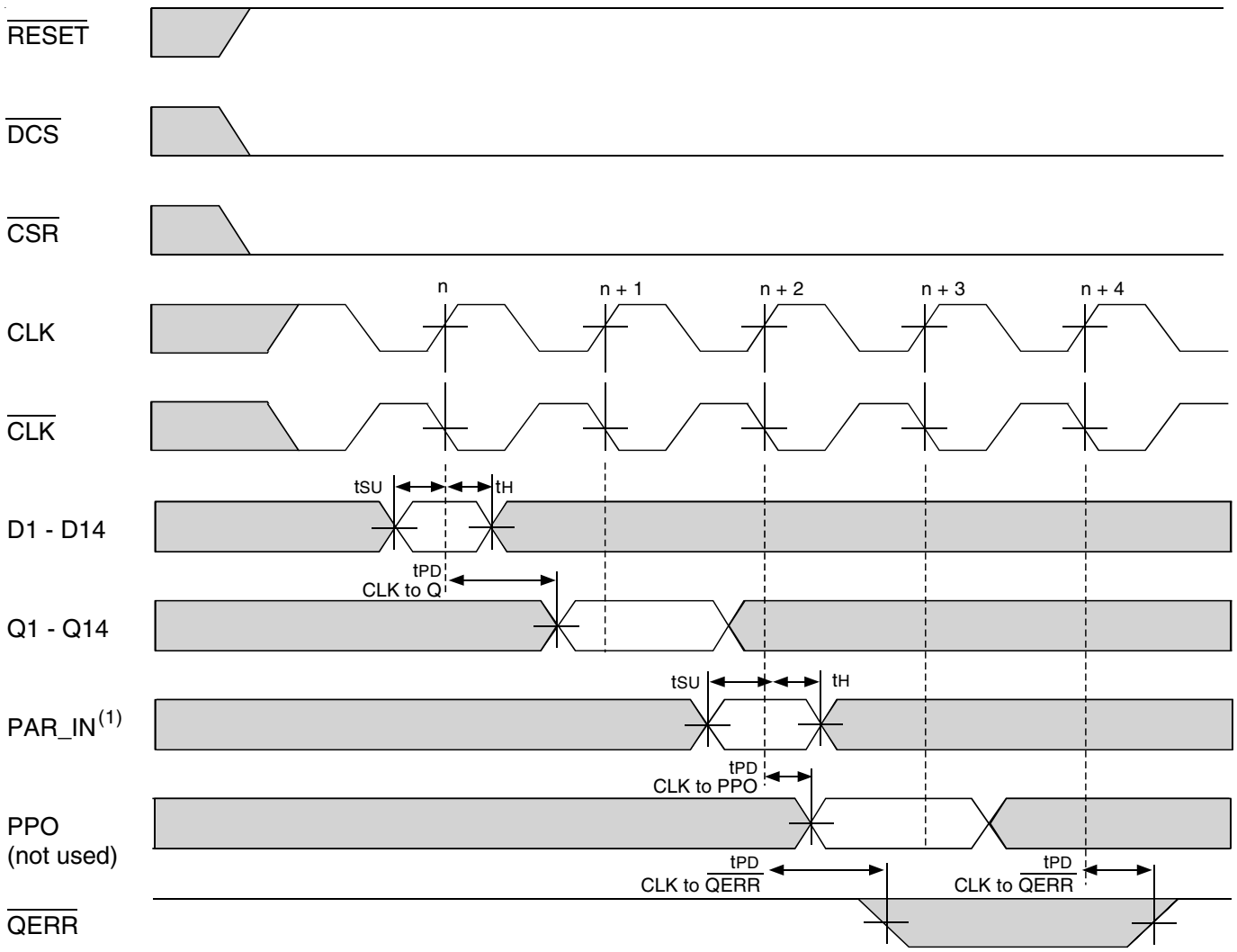

Timing Diagram for the First SSTU32866B (1:2 Register-B Configuration) Device Used in a Pair; C0 = 1, C1 = 1

TEST CIRCUITS AND WAVEFORMS (V_{DD} = 1.8V ± 0.1V)

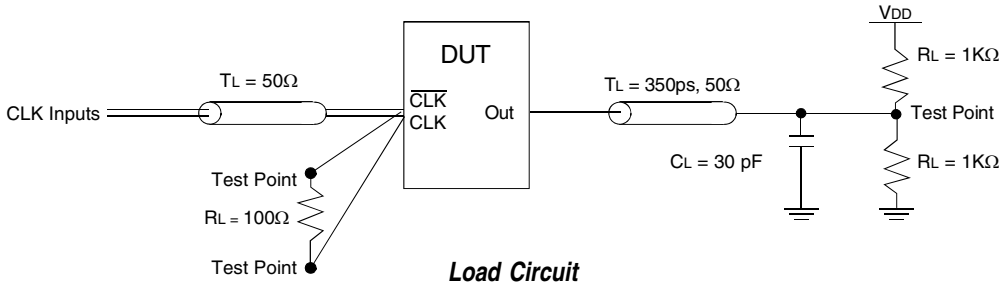

Load Circuit

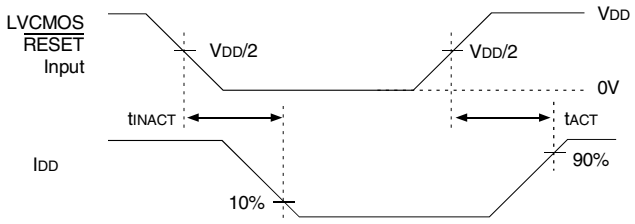

Voltage and Current Waveforms
Inputs Active and Inactive Times

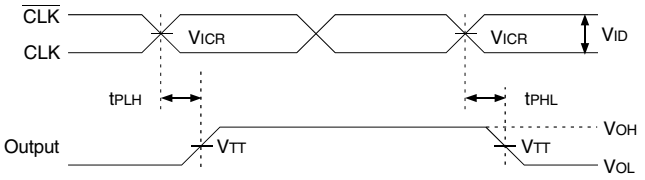

Voltage Waveforms - Propagation Delay Times

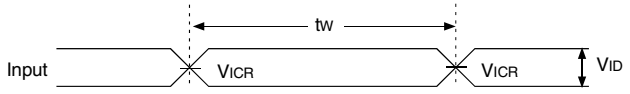

Voltage Waveforms - Pulse Duration

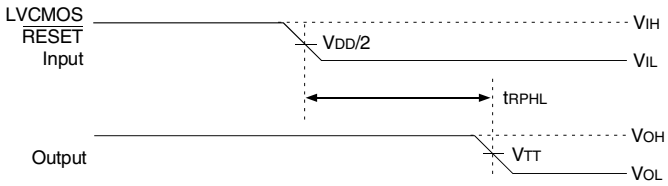

Voltage Waveforms - Propagation Delay Times

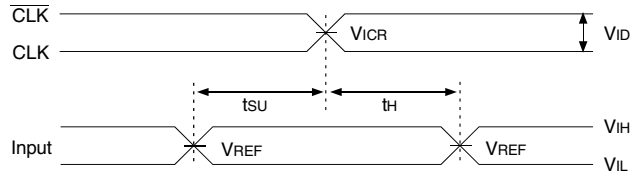

Voltage Waveforms - Setup and Hold Times

NOTES:

1. C_L includes probe and jig capacitance.
2. I_{DD} tested with clock and data inputs held at V_{DD} or GND, and I_O = 0mA
3. All input pulses are supplied by generators having the following characteristics: PRR ≤10MHz, Z_O = 50Ω, input slew rate = 1 V/ns ±20% (unless otherwise specified).
4. The outputs are measured one at a time with one transition per measurement.
5. $V_{TT} = V_{REF} = V_{DD}/2$
6. $V_{IH} = V_{REF}$ + 250mV (AC voltage levels) for differential inputs. $V_{IH} = V_{DD}$ for LVCMOS input.
7. $V_{IL} = V_{REF}$ - 250mV (AC voltage levels) for differential inputs. V_{IL} = GND for LVCMOS input.
8. V_{ID} = 600mV.
9. t_{PLH} and t_{PHL} are the same as t_{PDM}.

TEST CIRCUITS AND WAVEFORMS (V_{DD} = 1.8V ± 0.1V)

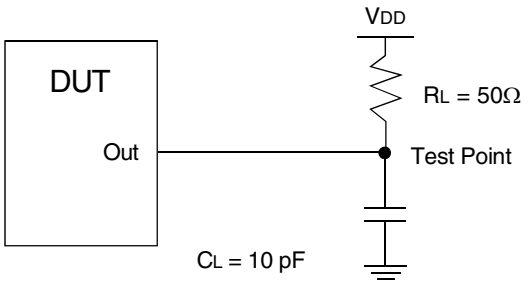

Load Circuit - High-to-Low Slew-Rate Adjustment

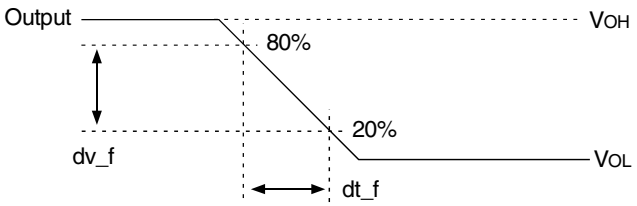

Voltage Waveforms - High-to-Low Slew-Rate Adjustment

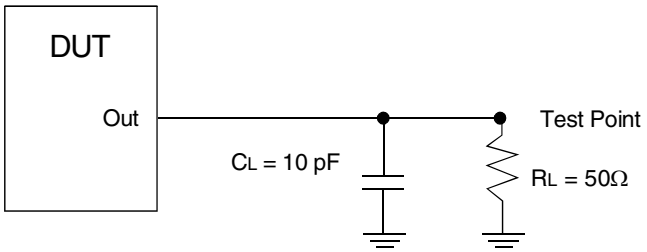

Load Circuit - Low-to-High Slew-Rate Adjustment

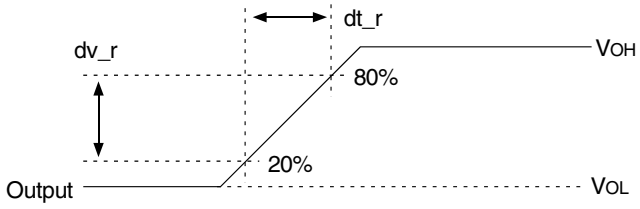

Voltage Waveforms - Low-to-High Slew-Rate Adjustment

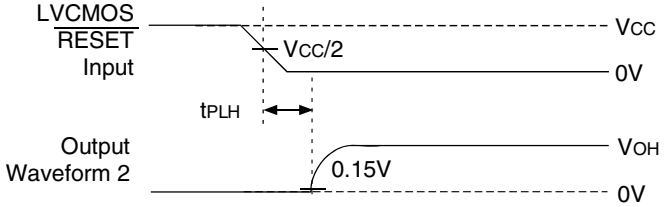

Voltage Waveforms - Open Drain Low-to-High Transition Time, Reset

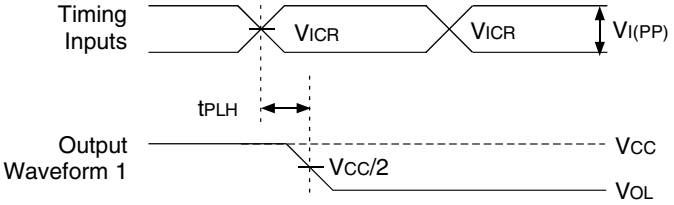

Voltage Waveforms - Open Drain Hight-to-Low Transition Time, Clock

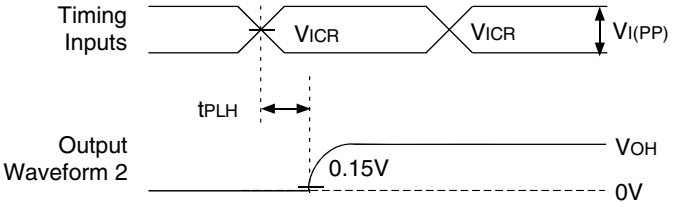

Voltage Waveforms - Open Drain Low-to-High Transition Time, Clock

NOTES:
1. C_L includes probe and jig capacitance.
2. All input pulses are supplied by generators having the following characteristics: PRR ≤10MHz, Z_O = 50Ω, input slew rate = 1 V/ns ±20% (unless otherwise specified).

TEST CIRCUITS AND WAVEFORMS (V_{DD} = 1.8V ± 0.1V)

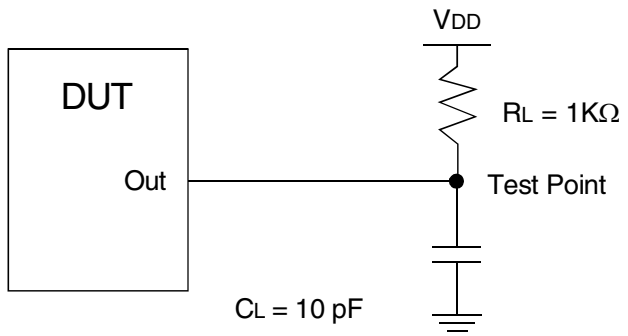

Load Circuit - $\overline{QERR}$ Output

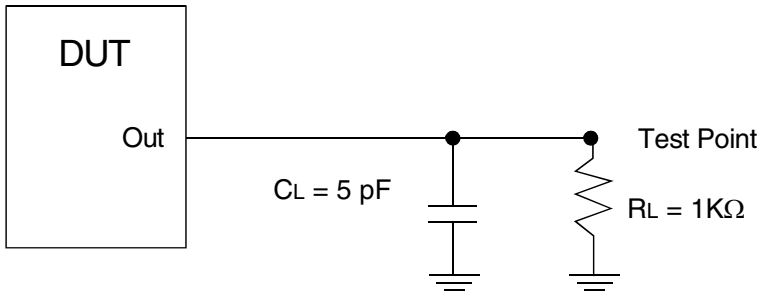

Load Circuit - Partial-Parity-Out Load Circuit

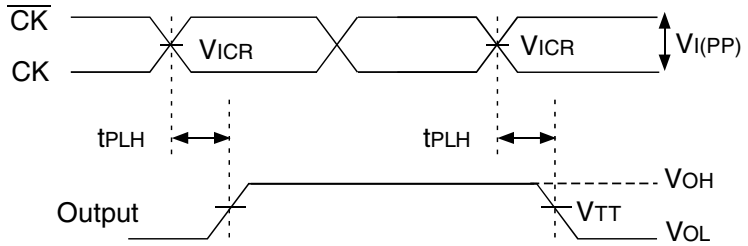

Voltage Waveforms - Propagation Delay Times with Respect to Clock Inputs

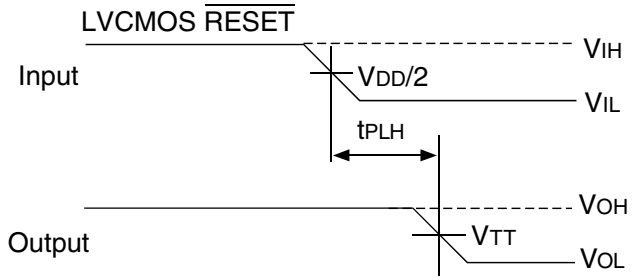

Voltage Waveforms - Propagation Delay Times with Respect to Reset Inputs

ORDERING INFORMATION

IDT XX SSTU32 XXX XX
Temp. Range Device Type Package

BFG	Low Profile, Fine Pitch, Ball Grid Array - Green
866B	1.8V Configurable Registered Buffer with Address - Parity Test
74	0°C to +70°C

CORPORATE HEADQUARTERS
6024 Silver Creek Valley Road
San Jose, CA 95138

for SALES:
800-345-7015 or 408-284-8200
fax: 408-284-2775
www.idt.com