Chipsmall Limited consists of a professional team with an average of over 10 year of expertise in the distribution of electronic components. Based in Hongkong, we have already established firm and mutual-benefit business relationships with customers from,Europe,America and south Asia,supplying obsolete and hard-to-find components to meet their specific needs.

With the principle of “Quality Parts,Customers Priority,Honest Operation,and Considerate Service”,our business mainly focus on the distribution of electronic components. Line cards we deal with include Microchip,ALPS,ROHM,Xilinx,Pulse,ON,Everlight and Freescale. Main products comprise IC,Modules,Potentiometer,IC Socket,Relay,Connector.Our parts cover such applications as commercial,industrial, and automotives areas.

We are looking forward to setting up business relationship with you and hope to provide you with the best service and solution. Let us make a better world for our industry!

# Contact us

Tel: +86-755-8981 8866 Fax: +86-755-8427 6832
Email & Skype: info@chipsmall.com Web: www.chipsmall.com
Address: A1208, Overseas Decoration Building, #122 Zhenhua RD., Futian, Shenzhen, China

UNIT:MM

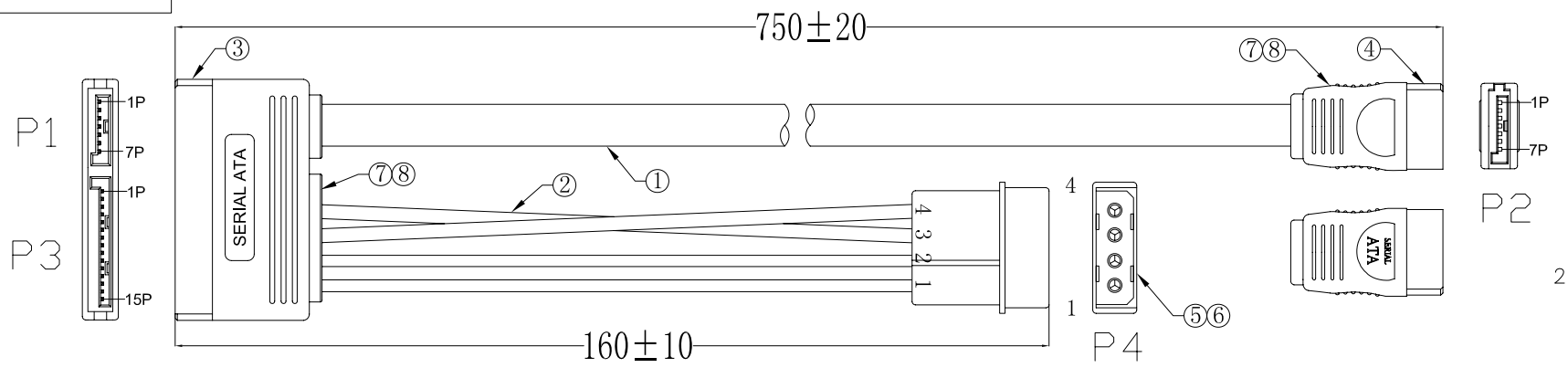


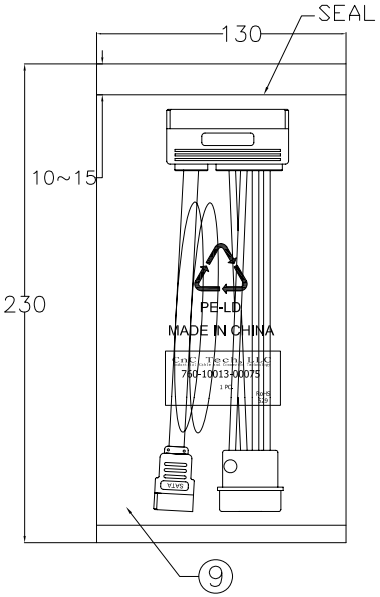


*Electrical test:*
*1.100% short,open,miswire test*
*2.Conduct resistance:2 Ohm(max)*
*3.Insulation resistance:5Mohm(min)*
*4.Hi-Pot test:DC 300V*

PIN ASSIGNMENT

| P1 | | P2 | P3 | | P4 |
|---|---|---|---|---|---|
| 1 | GND | 1 | 13, 14, 15 | YELLOW | 1 |
| 2 | | 2 | 10, 11, 12 | BLACK | 2 |
| 3 | | 3 | 4, 5, 6 | BLACK | 3 |
| 4 | GND | 4 | 7, 8, 9 | RED | 4 |
| 5 | | 5 | | | |
| 6 | | 6 | | | |
| 7 | GND | 7 | | | |

| NO. | NAME | Q'TY | SPECIFICATION |
|---|---|---|---|
| ⑩ | PE BAG | 1/10 | CLEAR SIZE: 280*330*0.05mm PRINT BLACK"MADE IN CHINA"+"10PCS"及生产周期,有透气孔. |
| ⑨ | PE BAG | 1 | CLEAR SIZE: 130*230*0.05mm PRINT BLACK"MADE IN CHINA"+"1PC"及生产周期,有透气孔. |
| ⑧ | IN JACKET | 8g | CLEAR HD-PE |
| ⑦ | OUT JACKET | 13g | PVC 45P COLOR BLACK |
| ⑥ | TERMINAL | 4 | TERMINAL MALE HPH=5.08mm TIN-PLATED. |
| ⑤ | HOUSING | 1 | BIG 4PIN FEMALE HOUSING PH=5.08mm WHITE |
| ④ | CONN | 1 | SATA 7P/F CONNECTOR:CRIMP TYPE TERMINAL:15U" INSULATOR:BLACK PBT |
| ③ | CONN | 1 | SATA 7P/F+15P/F CONNECTOR:CRIMP TYPE TERMINAL:15U" INSULATOR:BLACK PBT |
| ② | CABLE | 1 | UL1007 18AWG(41/0.16 TC) OD2.0mm JACKET YELLOW L140mm. |
| | | 2 | UL1007 18AWG(41/0.16 TC) OD2.0mm JACKET BLACK L140mm. |
| | | 1 | UL1007 18AWG(41/0.16 TC) OD2.0mm JACKET RED L140mm. |
| ① | CABLE | 1 | UL2725 [26AWG(1/0.404)*2+D(1/0.32)*2+AL]*2F OD2.2*7.8mm JACKET RED(RD-16#) L735+10/-0mm. |

# CnC Tech, LLC

Industrial Cable and Connector Technology

| | | | |
|---|---|---|---|
| DRAWED BY | ZHONGHS | DARWING NO. | |
| CHECKED BY | | CUSTOMER | |
| APPROVAL BY | | ITEM NO. | 760-10013-00075 |
| DECIDE BY | | DATE | 2012-02-16 |
| VERSIONS/EDITEON | A/0 | PROJECTION | |