Chipsmall Limited consists of a professional team with an average of over 10 year of expertise in the distribution of electronic components. Based in Hongkong, we have already established firm and mutual-benefit business relationships with customers from,Europe,America and south Asia,supplying obsolete and hard-to-find components to meet their specific needs.

With the principle of “Quality Parts,Customers Priority,Honest Operation,and Considerate Service”,our business mainly focus on the distribution of electronic components. Line cards we deal with include Microchip,ALPS,ROHM,Xilinx,Pulse,ON,Everlight and Freescale. Main products comprise IC,Modules,Potentiometer,IC Socket,Relay,Connector.Our parts cover such applications as commercial,industrial, and automotives areas.

We are looking forward to setting up business relationship with you and hope to provide you with the best service and solution. Let us make a better world for our industry!

Contact us

Tel: +86-755-8981 8866 Fax: +86-755-8427 6832
Email & Skype: info@chipsmall.com Web: www.chipsmall.com
Address: A1208, Overseas Decoration Building, #122 Zhenhua RD., Futian, Shenzhen, China

XBee

Drop-in-Networking Accessories User Guide

User Guide

XBee Drop-in-Networking Accessories User's Guide

90000891

Revision	Date	Description
H	May 2014	Clarified the max voltage reading on the XBee sensors.
I	N/A	Revision I is not used.
J	February 2015	Editorial changes. Added warranty information.
K	March 2016	Updated references to Device Cloud. Corrected broken links.
L	June 2017	Modified regulatory and certification information as required by RED (Radio Equipment Directive).

Trademarks and copyright

Disclaimers

Information in this document is subject to change without notice and does not represent a commitment on the part of Digi International. Digi provides this document "as is," without warranty of any kind, expressed or implied, including, but not limited to, the implied warranties of fitness or merchantability for a particular purpose. Digi may make improvements and/or changes in this manual or in the product(s) and/or the program(s) described in this manual at any time.

Warranty

To view product warranties online, visit www.digi.com/howtobuy/terms.

Send comments

Documentation feedback: To provide feedback on this document, send your comments to techcomm@digi.com.

Customer support

Digi Technical Support: Digi offers multiple technical support plans and service packages to help our customers get the most out of their Digi product. For information on Technical Support plans and pricing, contact us at +1 952.912.3456 or visit www.digi.com/support.

Contents

XBee USB Adapter

XBee Sensor Adapter

XStick

XBee Wall Router / Smart Energy Range Extender

XBee Smart Plug

XBee sensors

Configure XBee RF module settings

Hardware specifications

Safety statements

General information

This section includes information that applies to all XBee® Drop-in Networking Accessories.

About this guide

This guide describes the features and functions of all XBee Drop-in Networking Accessories for all XBee module protocols, including adapters, routers, sensors, and associated products.

It includes connection and setup information, pinouts, configuration, data retrieval, and LEDs and buttons.

Software programming for XBee Drop-in Networking Accessories is covered on product pages within the Digi Developer Community Wiki; see below for more information and location of these pages.

Additional product information and resources

Product data sheets, user's guides, and product manuals

Locate more information, including datasheets, XBee product manuals, Digi gateway product information, as well as other information, on the following page:

www.digi.com/products/gateways/

Software development resources

Digi provides several resources to help you get started developing software solutions in Python:

Digi Developer Community wiki

The Digi Developer Community Wiki is a place to learn about developing solutions using Digi's communications portfolio, software and services, including Python, Device Cloud and more.

www.digi.com/wiki/developer/index.php/Main_Page

Each product's chapter shows the link to the Wiki page for programming the product. For an index page for all XBee Drop-in Networking Accessories, go to:

www.digi.com/wiki/developer/index.php/Category:Drop-in_Networking_Products

Digi Python Custom Development Environment Page

Python is a dynamic, object-oriented language for developing software applications, from simple programs to complex embedded applications. You can use Python to obtain data from attached and integrated sensors on XBee Drop-in Networking Accessories. Find this page at:

www.digi.com/technology/drop-in-networking/python.jsp

Digi Python Programming Guide

This guide introduces the Python programming language by showing how to create and run a simple Python program. It reviews Python modules, particularly modules with Digi-specific behavior. It describes how to load and run Python programs onto Digi devices, either through the command- line or web user interfaces, and how to run several sample Python programs. Find this guide at the Digi Python Wiki page--in the **Start Here** section, click the link titled **Digi Python Programmer's Guide**

www.digi.com/wiki/developer/index.php/Python_Wiki

Python Support Forum on digi.com

Find answers to common questions and exchange ideas and examples with other members of the Digi Python development community at:

www.digi.com/support/forum/

Hardware changes between 9-30V and 3.7-6V Adapter models

XBee Adapters have undergone some hardware changes since first being launched. Most of the these changes are minor and will have no impact on your application. However, one important difference relates to supply voltage.

Originally, XBee Adapters were designed to accept 9-30VDC. In an effort to improve battery performance, this voltage range has been changed to 3.7-6 VDC.

Power supplies used on 9-30VDC XBee Adapters will not work with 3.7-6VDC XBee Adapters, and vice versa. Your XBee Adapter's proper voltage is printed next to its power port.

CAUTION! Plugging in a power supply with the incorrect voltage will damage your device and void your warranty.

Several other changes have been implemented in the 3.7-6VDC XBee Adapter models, including an improved screw-lock connector for XBee RS-485, XBee Digital I/O, and XBee Analog I/O Adapters, and external antennas for XBee-PRO Adapters. Contact Technical Support for more details.

Powering options for adapters

Some Drop-in Networking Accessories, including the XBee Sensor, XBee Smart Plug and XBee Wall Router all have necessary powering options included.

XBee Adapter products can be powered by an external power supply or batteries, purchased separately. To determine how to power your XBee Adapter, please **refer to the specification printed on the side of the enclosure**, close to the power port:

Specification	Power Options
3.7 to 6 VDC	Power supply: must be rated 3.7 to 6 VDC. Digi part number for 5V power supply: **XA-ACC-PS5-NR** Battery: uses custom lithium battery pack; Digi part number: **XA-ACC-CS-L** Battery amp hours: 1650 mAH. Replacement batteries available for purchase; contact Digi at **952-912-3444**.
9 to 30 VDC	Power supply: must be rated 9 to 30 VDC. Digi part number for 9V power supply: **XA-ACC-PS** Battery: uses quantity 3 of 1.5V "N-Cell" alkaline batteries (input power is automatically down-converted). Use standard, off-the-shelf, batteries, or Digi part number: **XA-ACC-BATT** To install batteries, insert a screwdriver in the slots in the side of the adapter case and twist to snap off the cover. Insert the batteries following the polarity diagram on the board.

For additional information, see the Power requirements rows in the table: XBee Adapters on page 64.

Warranty exception for batteries

Some XBee Drop-in Networking Accessories ship with alkaline batteries that must be replaced by the user when discharged.

Lithium batteries must be installed or replaced by qualified service personnel.

Alkaline and lithium batteries are not covered under the terms and conditions of the Digi warranty.

Antenna considerations

Products with external antennas should be mounted with the antenna oriented vertically to maximize the range.

Products with external antennas use RPSMA antenna connectors.

Products without external antennas can be mounted in any orientation.

Product compatibility and differences among XBee RF protocols

XBee Drop-in Networking Accessories contain an XBee or XBee-PRO module, an RF module that performs the wireless communications for your product. Certain RF module behaviors vary by XBee RF protocol. This section describes those differences and how they affect product operation.

Compatibility of accessories with other XBee products

Drop-in Networking Accessories that use a particular XBee RF protocol are compatible with other products of the same XBee RF protocol only. XBee ZB products will only work with other XBee ZB products, XBee 802.15.4 products with other XBee 802.15.4 products, and so on. This applies to gateways as well: ConnectPort X gateway products with an XBee ZB module are compatible with other such gateways, 802.15.4 gateways with other such gateways, and so on. Users must standardize on one XBee RF protocol series for operability.

Product support and availability by XBee RF protocol

Product availability varies by XBee RF protocol. The table shows the XBee Drop-in Networking Accessories available for each XBee platform.

Product / Protocol	XBee ZB	XBee ZNet2.5	XBee 802.15.4	XBee Smart Energy	XBee 868	XBee DigiMesh 900	XBee DigiMesh 2.4
XBee RS-232 Adapter	✓	✓	✓		✓	✓	✓
XBee RS-485 Adapter	✓	✓	✓		✓	✓	✓
XBee Analog Adapter	✓	✓	✓		✓	✓	✓
XBee Digital I/O Adapter	✓	✓	✓		✓	✓	✓
XBee USB Adapter	✓	✓				✓	✓
XStick	✓	✓	✓				
XBee Wall Router	✓	✓					
XBee Smart Energy Range Extender				✓			
XBee Smart Plug	✓	✓					
XBee Sensors	✓	✓					

Note New customer deployments should not use the ZNet 2.5 protocol. Instead, use the ZigBee-certified ZB protocol. ZNet, an older protocol based on a “Designed for ZigBee” stack, should only be used where required for compatibility with previously deployed ZNet 2.5 products.

XBee-PRO 868 availability

This product is end-of-life and is not for new design.

Firmware updates for XBee adapters and routers

The following table illustrates firmware update options by adapter type.

Adapter	Firmware Update?
USB Adapter	Allowed
XStick	Allowed
RS-232 Adapter	Allowed
RS-485 Adapter	Not allowed
Analog Adapter	Not allowed

Adapter	Firmware Update?
Digital I/O Adapter	Not allowed
XBee Wall Router	Allowed with programming cable
XBee Smart Energy Range Extender	Allowed with programming cable
XBee Smart Plug	Allowed with programming cable

ZB Adapters allow over-the-air (OTA) firmware updates. The firmware for other adapter types must be updated locally.

Idle current and sleep current - XBee and XBee-PRO

The following tables list the average expected idle and sleep currents for XBee adapters, based on type and network protocol. The first table shows XBee sleep current values, the second table shows XBee-PRO sleep current values. If an adapter is not listed here, it does not support sleep.

XBee Product / Protocol	XBee DigiMesh 2.4
RS-232 Adapter	72uA idle 230uA sleep
RS-485 Adapter	56uA idle 76uA sleep

XBee-PRO Product / Protocol	XBee-PRO DigiMesh 900	XBee-PRO DigiMesh 2.4
RS-232 Adapter	74uA idle 68mA sleep	75uA idle 287uA sleep
RS-485 Adapter	69uA idle 78uA sleep	58uA idle 140uA sleep
Digital I/O Adapter	57uA idle 108uA sleep	57uA idle 108uA sleep

XBee Adapters network association status

The Associate LED (occasionally abbreviated as Assc or Assoc) indicates the network association status for an XBee Drop-in Networking Accessory in an XBee network.

XBee ZB / XBee ZNet 2.5

If your network requires a coordinator device, the Associate LED indicates network association status in the following manner:

LED state	Network association
On, solid green	Not associated
On, blinking green	Successfully joined

XBee SE

If you are using products in a Smart Energy network, the Associate LED indicates network association status as follows:

LED state	Network association
On, solid green	Successfully joined
On, blinking green	Not joined, joining, or joined but connection invalid

Smart Energy Range Extender

The Smart Energy Range Extender's Associate LED indicates its join status; once joined, the LED also indicates the status of the adapter's connection to the network's Coordinator.

LED state	Network association
LED state	Network association
On, solid green	Joined, connection to Coordinator is working
On, 3 sec blink	Not joined, AI register indicates why
On, 1 sec blink	Trying to join
On, 1/4 sec blink	Joined, but connection to Coordinator is not working

XBee 802.15.4 / XBee 868

In networks that do not use a coordinator device for association, products are configured with a default PAN ID and destination address. On power-up, these products immediately indicate association by blinking to maintain LED consistency.

For more information regarding association options, see the manual for the XBee module in your product.

XBee DigiMesh 900 / XBee DigiMesh2.4

Products that have been configured in a synchronous sleep-compatible mode use the Associate LED to indicate the status of the node's synchronization with the sleeping network. Products that are not configured for sleep use the Associate LED to indicate that they are operating properly.

Synchronous sleep compatible?	LED state	Meaning
No	On, blinking green	Product is powered and operating properly.
Yes	On, solid green	Product has not synchronized with the network or has lost synchronization with the network.
Yes	On, slow blinking green (500 mSec blink time)	Product is acting as the network sleep coordinator and is operating properly.
Yes	On, fast blinking green (250 mSec blink time)	Product is properly synchronized with the network.

Commissioning and identity behaviors

The Ident button (or on some products, a combined Reset/Ident button) performs multiple functions to identify and configure the product in an XBee network. The location of this button is shown in each product's chapter.

Button presses and actions for each XBee RF protocol vary as shown in the following tables. These descriptions introduce XBee module concepts and commands. For additional information on these concepts and commands, see the product manual for your XBee module.

Consecutive button presses must occur within 800 milliseconds of each other to perform the desired action.

Note For more detailed descriptions and configuration information, see the CB command description in the XBee/XBee-PRO OEM Product manual for your particular module.

XBee SE

Number of button presses	Network association	Action
1	Associated	If the XBee module is asleep and associated with a network, pressing the button once wakes the unit for 30 seconds.
	Unassociated	If the unit is unassociated, one press starts the join process. Module will attempt to join a network three times before giving up. AI reading will indicate either joining success (0x00) or a reason for failure (nonzero value). See the AI command description in the product manual of your particular XBee module for more details.
2	Associated	If the unit is associated to a network, two button presses will cause it to broadcast a permit join message to the coordinator and all routers in the network. Permit join persists on a module for NJ time. See the NJ command description in the product manual for your particular XBee module for more details.
	Unassociated	If the unit is unassociated, there is no action.
4	Associated	If associated to a network, four button presses will cause the unit to broadcast a Leave notification to the network, then leave the network. It also restores the module to its EEPROM configuration values, except for the XBee Smart Energy Wall Router, which does not restore values.
	Unassociated	If the unit is unassociated, four presses restores the module to its EEPROM configuration values, except for the XBee Smart Energy Wall Router, which does not restore values.

XBee ZB / XBee ZNet 2.5

Number of button presses	Network association	Action
1	Associated	If XBee module is asleep, wakes unit for 30 seconds. Sends a Node Identification broadcast transmission. All devices that receive this transmission will blink their Associate LED rapidly for 1 second. All API devices that receive this transmission will send a Node Identification frame out their universal asynchronous receiver/transmitter (UART) (API ID 0x95).
	Unassociated	If XBee module is asleep, wakes unit for 30 seconds, then blinks the AI code, a numeric error code on the Assc LED indicating the cause of join failure. **1 blink**: Scan found no networks (PANs) to join. **2 blinks**: Scan found no valid PANs based on current settings for SC (Scan Channel) and ID (PAN ID). **3 blinks**: Valid coordinator or routers were found, but they are not allowing joining, because the permit join or NJ command expired. **7 blinks**: Network joining attempt failed. **10 blinks**: Coordinator Start attempt failed.
2	Associated	Depends on the setting for the permit join (NJ) command for the XBee module. If the XBee module's NJ command setting is less than 255, two button presses temporarily enable joining on the XBee module and on the entire XBee network for 1 minute. If joining is permanently enabled on a module (NJ = 255), joining remains permanently enabled, and two button presses have no effect.
4	Associated/ Unassociated	XBee module leaves PAN, if associated, and issues a factory reset to restore default parameters in the XBee module. For XBee ZNet 2.5, the default PAN ID is 0x234. For XBee ZB, the default PAN ID is 0 (join any network).
4, followed by reset	Associated/ Unassociated	XBee module restores to EEPROM values

XBee 802.15.4

Number of button presses	Network association	Action
1	Associated	Cannot wake module, but causes module to remain awake for 30 seconds if pressed when the module is awake. Sends a Node Identification broadcast transmission. All devices that receive this transmission will blink their Associate LED rapidly for 1 second.
	Unassociated	Blinks a numeric error code returned by the ATAI (Association Indication) command on the Assc LED. The AI code indicates the cause of the join failure. See the 802.15.4 XBee Product Manual for descriptions of these codes. **1 blink**: Active scan timeout. **2 blinks**: Active scan found no PANs. **3 blinks**: Active scan found PAN, but the Coordinator Allow Association bit is not set. **4 blinks**: Active scan found a PAN, but Coordinator and End Device are not configured to support beacons. **5 blinks**: Active scan found a PAN, but Coordinator ID (PAN ID) value does not match the ID of the End Device. **6 blinks**: Active Scan found a PAN, but Coordinator CH (Channel) value does not match the CH of the End Device. **7 blinks**: Energy scan timeout. **8 blinks**: Coordinator start request failed. **9 blinks**: Coordinator could not start due to invalid parameters. **10 blinks**: Coordinator Realignment is in progress. **11 blinks**: Association request not sent. **12 blinks**: Association request timed out - no reply was received. **13 blinks**: Association request had an invalid parameter. **14 blinks**: Association request channel access failure - request was not transmitted - CCA failure. **15 blinks**: Remote Coordinator did not send an ACK after Association Request was sent. **16 blinks**: Remote Coordinator did not reply to the Association Request, but an ACK was received after sending the request. **17 blinks**: reserved. **18 blinks**: Sync-Loss - lost synchronization with a beaconing coordinator. **19 blinks**: Disassociated - no longer associated to coordinator.
2	Associated	Not supported.
4	Associated/ Unassociated	Performs an ATRE command to reset the parameters in the XBee module.
4, followed by reset	Associated/ Unassociated	XBee module restores to EEPROM values

XBee DigiMesh 900 / XBee DigiMesh 2.4

Number of button presses	Sleep configuration and sync status	Action
1	Not configured for sleep	Immediately sends a Node Identification broadcast transmission. All devices that receive this transmission will blink their Associate LED rapidly for 1 second. All API devices that receive this transmission will send a Node Identification frame out their UART (API ID 0x95).
1	Configured for sleep	Wakes the module for 30 seconds, or until the entire network goes to sleep. Queues a Node Identification broadcast transmission to be sent at the beginning of the next network wake cycle. All devices that receive this transmission will blink their Associate LED rapidly for 1 second. All API devices that receive this transmission will send a Node Identification frame out their UART (API ID 0x95).
2	Not configured for sleep	Not supported.
2	Configured for sleep	Causes a node that is configured with sleeping router nomination enabled to immediately nominate itself as the network sleep coordinator. For more information on this action, see the description of the ATSO sleep options command in the product manual for your specific XBee module.
4	Either	Issues an ATRE command to restore module parameters to default values.
4, followed by reset	Either	XBee module restores to EEPROM values.

Waking DigiMesh 2.4 XBee modules

When attempting to wake an XBee DigiMesh2.4 module from sleep, you must hold down the commissioning button for up to two seconds before the module will wake up.

XBee 868

Number of button presses	Action
1	Immediately sends a Node Identification broadcast transmission. All devices that receive this transmission will blink their Associate LED rapidly for 1 second. All API devices that receive this transmission will send a Node Identification frame out their UART (API ID 0x95).
2	Not supported.
4	Issues an ATRE command to restore module parameters to default values.
4, followed by reset	XBee module restores to EEPROM values.

Power levels of XBee radios

The transmit power level (PL setting) varies among XBee RF protocols.

XBee ZB / XBee ZNet 2.5

XBee Module

Power level	Conducted power in dBm
Lowest (0)	-8 dBm
Low (1)	-4 dBm
Medium (2)	-2dBm
High (3)	0 dBm
Maximum (4)	+2dBm

XBee-PRO Module

XBee-PRO ZB and ZNet 2.5 modules have a fixed power level that cannot be changed.

Power variant	Fixed conducted power in dBm
North American	+17 dBm
International	+10 dBm

XBee-PRO modules for RS-485 and RS-232 adapters have the following transmit power level (PL setting):

Settings	Transmit power in dBm
Setting	Transmit power in dBm
Lowest (0)	+9 dBm
Low (1)	+12 dBm
Medium (2)	+14 dBm
High (3)	+16 dBm
Maximum (4)	18 dBm

XBee 802.15.4

XBee Module

Power level	Conducted power in dBm
Lowest (0)	-10 dBm
Low (1)	-6 dBm
Medium (2)	-4 dBm
High (3)	-2 dBm
Maximum (4)	0 dBm

XBee-PRO Module

Power level	North American variant	International variant
Lowest (0)	+10 dBm	-3 dBm
Low (1)	+12 dBm	-3 dBm
Medium (2)	+14 dBm	+2 dBm
High (3)	+16 dBm	+8 dBm
Maximum (4)	+18 dBm	+10 dBm

XBee DigiMesh 900

The output power is always 17 dBm.

XBee 868

Power level	Conducted power in dBm
Lowest (0)	0 dBm
Low (1)	+13.7 dBm
Medium (2)	+20 dBm*
High (3)	+22 dBm**
Maximum (4)	+25 dBm
* These products are currently set to not exceed this power setting: XBee RS-232 Adapter XBee RS-485 Adapter XBee Analog I/O Adapter XBee Digital I/O Adapter ** XBee USB Adapter is currently set to not exceed this power setting.	

XBee DigiMesh 2.4

XBee Module

Power level	Conducted power in dBm
Lowest (0)	-7 dBm
Low (1)	-1.7 dBm
Medium (2)	-0.77 dBm
High (3)	+0.62 dBm
Maximum (4)	+1.42 dBm

XBee-PRO Module

Power level	North American variant	International variant
Lowest (0)	+10 dBm	-3 dBm
Low (1)	+12 dBm	-3 dBm
Medium (2)	+14 dBm	+2 dBm
High (3)	+16 dBm	+8 dBm
Maximum (4)	+18 dBm	+10 dBm

Duty cycle for XBee 868 Module

The XBee 868 module has constraints regarding the amount of data it can transmit during a given time period. The duty cycle of this module is 10% averaged over the period of one hour. This means that if the next transmission will push the running average duty cycle over the 10% limit, the module will not transmit until enough time has elapsed to stay under the duty cycle. Because of heat restraints of the module, a 10% duty cycle over the period of one second will be enforced after the measured temperature of the module rises above 60°C.

XBee RS-232 Adapter

Overview of the XBee RS-232 Adapter

The XBee RS-232 Adapter provides short-range wireless connectivity to any RS-232 serial device. Unlike an embedded wireless module, which requires design integration and development time, these off-the-shelf adapters provide instant wireless connectivity to existing RS-232 serial devices. All XBee adapters can be used with Digi's ConnectPort X gateways for data aggregation and IP connectivity.

Connection and power for the XBee RS-232 Adapter

1. Connect the desired device to the RS-232 port of the adapter.
2. Connect the power supply to the adapter or insert batteries.

Pinouts in the XBee RS-232 Adapter

The RS-232 connector is an industry-standard DB9 male connector with a DTE configuration, similar to a PC serial port.

To connect the XBee RS232 Adapter to another DTE device, use a standard DB9 crossover serial cable similar to Digi part number 76000642.

To connect the adapter to a DCE device, use a straight-through null modem cable similar to Digi part number 63000066-01.

Pin 1 is in the leftmost pin on the upper row of pins; pin numbers increment from left to right, continuing left to right on the second row.

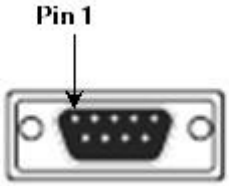

Pinouts for the connector are:

Pin	Function	Data direction
1	CD	Input
2	RXD	Input
3	TXD	Output
4	DTR	Output
5	GND	
6	DSR	Input
7	RTS	Output
8	CTS	Input
9	+12VDC switched power out	Output

Software programming and data retrieval

There are several avenues for programming the adapter.

To get started on developing solutions with the XBee RS-232 Adapter using Device Cloud, see the Device Cloud product page at www.digi.com/products/cloud/digi-device-cloud.

For details on programming the adapter and retrieving data from it, see the XBee RS-232 Adapter product page on the Digi Developer Community Wiki:

www.digi.com/wiki/developer/index.php/Category:Drop-in_Networking_Products

LEDs and buttons

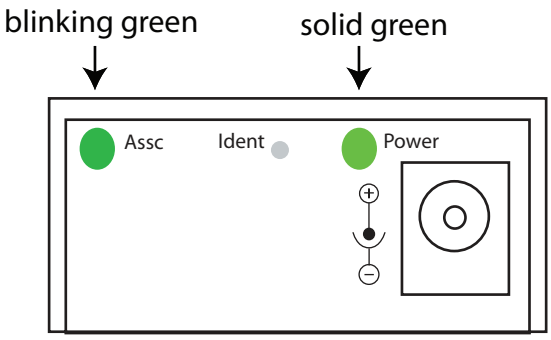

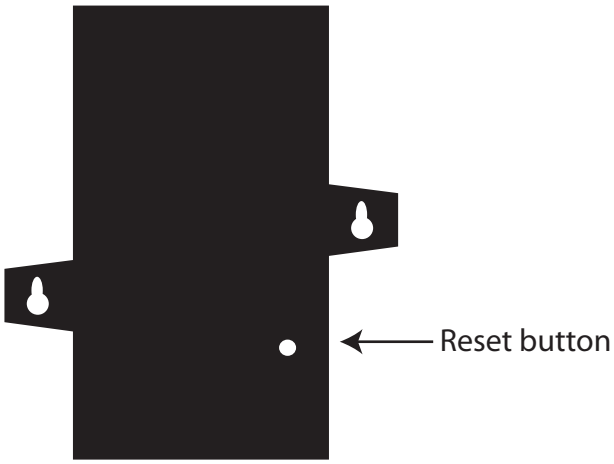

LED/Button	Function
Power LED	Indicates whether power is on. Illuminated only when adapter is connected to external power, not when powered by batteries. Not available in lithium-battery models.
Assc LED	Indicates the adapters' network association status. This LED functions differently depending on the XBee RF protocol for the product. See XBee Adapters network association status on page 10 for more information.
Reset Button	Recessed button on underside of the adapter. Performs equivalent of a power-cycle. Use a small non-conductive tool with a blunt end to press gently and hold down button.
Ident Button	Recessed button on power end of the adapter between Assc and Power LEDs. Performs multiple functions for identifying and configuring the adapter in a wireless network. Button presses and actions vary by XBee RF protocol; see Commissioning and identity behaviors on page 12. Consecutive button presses must occur within 800 milliseconds of each other to perform the desired action.

XBee RS-485 Adapter

Overview of the XBee RS-485 Adapter

The XBee RS-485 Adapter provides short-range wireless connectivity to any RS-485 serial device. Unlike an embedded wireless module, which requires design integration and development time, these off-the-shelf adapters provide instant wireless connectivity to existing RS-485 serial devices. All XBee adapters can be used with Digi's ConnectPort X gateways for data aggregation and IP connectivity.

Connection and power for the XBee RS-485 Adapter

1. Connect the desired device to the RS-485 port of the adapter.
2. Connect the power supply to the adapter or insert batteries.

Pinouts of the XBee RS-485 Adapter

The connector for the adapter is a 6-position wire terminal block. The figure shows Pin 1 of connector when the adapter is oriented with the mounting tabs, while viewing the underside of the adapter.

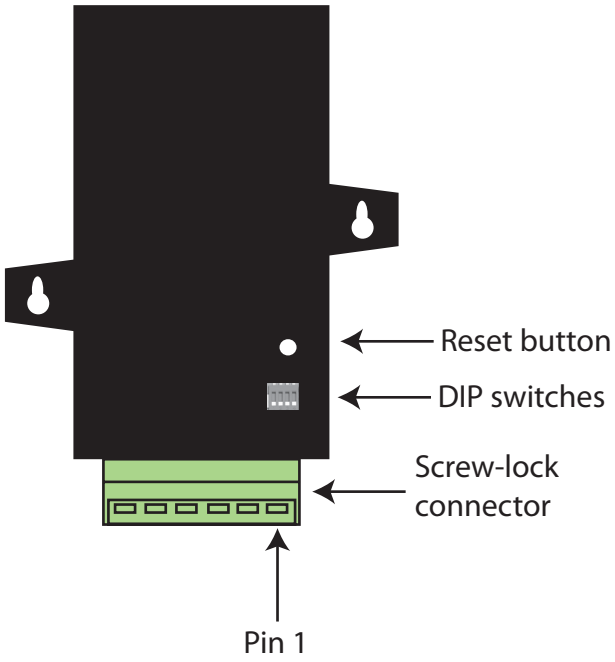

The adapter is switch-selectable between RS-422 half duplex/full duplex, and RS-485 modes (see DIP switches on page 24). The function for several pins varies between RS-422 and RS-485 modes.

Using the orientation in the above figure, pin 1 is the right-most pin and pin numbers increment from right to left. Pinouts for the connector are:

Pin	Function in RS-422 Mode	Function in RS-485 Mode
1	TxD+ (RS422)	TxD+ and RxD+ (RS485)
2	TxD- (RS422)	TxD- and RxD- (RS485)
3	RxD+ (RS422)	Not used.
4	RxD- (RS422)	Not used.
5	Ground	Ground
6	+12VDC 50mA max switched power out	+12VDC 50mA max switched power out

The connector accommodates wire gauges from 16AWG to 30AWG.

To insert wires, insert the wires into the removable screw-lock connector and tighten the screws associated with the wire slots.

To remove wires, loosen the screws associated with the wire slots and remove the wires.

DIP switches

The XBee RS-485 Adapter has several DIP switches on the underside of the unit. DIP switch 1 is the leftmost switch. When the adapter is oriented with the mounting tabs facing upwards, the DIP switches are in the ON position when the switches are positioned away from the screw-lock connector. Switch settings are:

DIP Switch	Switch settings
1	Not used. It is covered up by the case and is not accessible.
2, 3, 4 together	ON = RS485 OFF = RS422
5, 6 together	ON = RS485 bias and line termination on. OFF = RS485 bias and line termination off. **Note** You can only use the bias and line termination feature when you are powering the adapter from the external power supply.

Software programming and data retrieval

There are several avenues for programming the XBee RS-485 Adapter.

To get started on developing solutions with the XBee RS-485 Adapter using Device Cloud, see the Device Cloud product page at www.digi.com/products/cloud/digi-device-cloud.

For details on programming the XBee RS-485 Adapter and retrieving data from it, see the XBee RS-485 Adapter product page on the Digi Developer Community Wiki:

www.digi.com/wiki/developer/index.php/Category:Drop-in_Networking_Products

LEDs and buttons

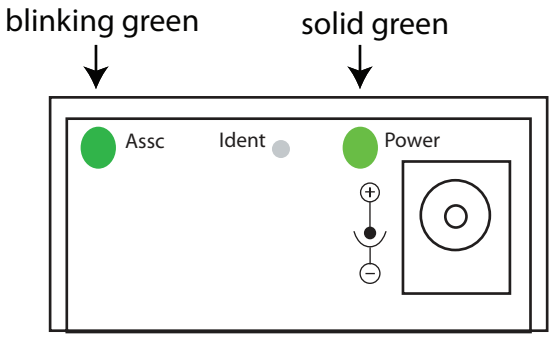

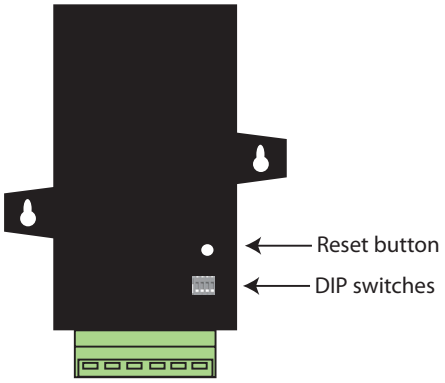

LED/Button	Function
Power LED	Indicates whether power is on. Illuminated only when adapter is connected to external power, not when powered by batteries. Not available in lithium-battery models.
Assc LED	Indicates the adapters' network association status. This LED functions differently depending on the XBee RF protocol for the product. See XBee Adapters network association status on page 10 for more information.
Reset button	Recessed button on underside of the adapter. Performs equivalent of a power-cycle. Use a small non-conductive tool with a blunt end to press gently and hold down button.
Ident button	Recessed button on power end of the adapter between Assc and Power LEDs. Performs multiple functions for identifying and configuring the adapter in a wireless network. Button presses and actions vary by XBee RF protocol; see Commissioning and identity behaviors on page 12. Consecutive button presses must occur within 800 milliseconds of each other to perform the desired action.