Chipsmall Limited consists of a professional team with an average of over 10 year of expertise in the distribution of electronic components. Based in Hongkong, we have already established firm and mutual-benefit business relationships with customers from,Europe,America and south Asia,supplying obsolete and hard-to-find components to meet their specific needs.

With the principle of “Quality Parts,Customers Priority,Honest Operation,and Considerate Service”,our business mainly focus on the distribution of electronic components. Line cards we deal with include Microchip,ALPS,ROHM,Xilinx,Pulse,ON,Everlight and Freescale. Main products comprise IC,Modules,Potentiometer,IC Socket,Relay,Connector.Our parts cover such applications as commercial,industrial, and automotives areas.

We are looking forward to setting up business relationship with you and hope to provide you with the best service and solution. Let us make a better world for our industry!

Contact us

Tel: +86-755-8981 8866 Fax: +86-755-8427 6832
Email & Skype: info@chipsmall.com Web: www.chipsmall.com
Address: A1208, Overseas Decoration Building, #122 Zhenhua RD., Futian, Shenzhen, China

Units:mm

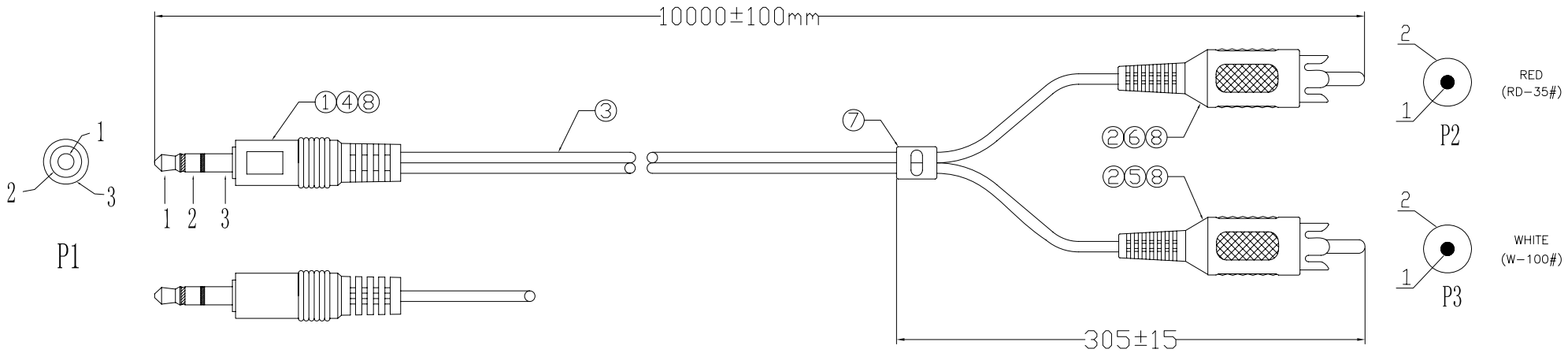

PIN ASSIGNMENT:

P1	P2	P3	COLOR
1	1		RED
2		1	WHITE
3	2		DRAIN(RED)
		2	DRAIN(WHITE)

Electrical test:
1.100% short,open,miswire test
2.Conduct resistance:5 Ohm(max)
3.Insulation resistance:10Mohm(min)
4.dielectric test:DC 300V

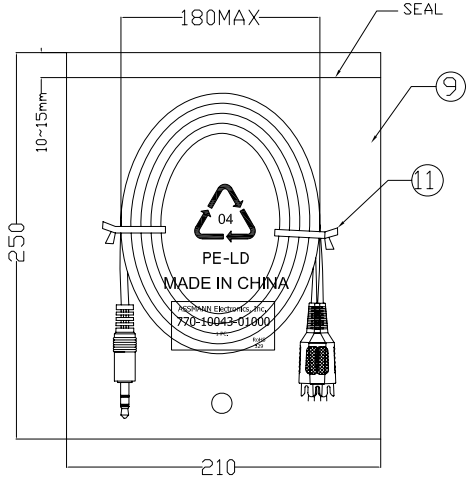

NO.	NAME	Q'TY	SPECIFICATION
⑪	TIE	2	BLACK L=150mm
⑩	PE BAG	1/5	CLEAR SIZE: 360*380*0.05mm PRINT BLACK"MADE IN CHINA"+"5PCS"
⑨	PE BAG	1	CLEAR SIZE: 210*250*0.05mm PRINT BLACK"MADE IN CHINA"+"1PC"
⑧	TUBE	3	HEAT SHRINK TUBE BLACK OD1.5*10mm
⑦	S/R	1.5g	BLACK PVC 40P (Mould NO.:SR-048)
⑥	IN JACKET	0.8g	CLEAR LD-PE (Mould NO.:NM-006)
	OUT JACKET	3.3g	PVC-40P RED(RD-35),(Mould NO.WM-009)
⑤	IN JACKET	0.8g	CLEAR LD-PE (Mould NO.:NM-006)
	OUT JACKET	3.3g	PVC-40P WHITE(W-100)(Mould NO.WM-009)
④	OUT JACKET	3.0g	BLACK PVC-40P (Mould NO.:WM-020)
③	CABLE	1	NOUL 28#(10/0.10+28/0.10)*2F JACKET BLACK OD2.8*5.6mm
②	CONN	2	RCA PLUG MALE BLOSSOM TYPE NI-PLATED INSULATOR COLOR:BROWN
①	CONN	1	3.5ST MALE Tray6.0mm L=26mm MOLD TYPE NI-PLATED INSULATOR COLOR:BLACK

CnC Tech, LLC

Industrial Cable and Connector Technology

DRAWED BY	LICHENG	DARWING NO.	
CHECKED BY		CUSTOMER	
APPROVAL BY		ITEM NO.	770-10043-01000
DECIDE BY		DATE	2012-12-17
VERSIONS/EDITEON	A/0	PROJECTION	