Chipsmall Limited consists of a professional team with an average of over 10 year of expertise in the distribution of electronic components. Based in Hongkong, we have already established firm and mutual-benefit business relationships with customers from,Europe,America and south Asia,supplying obsolete and hard-to-find components to meet their specific needs.

With the principle of “Quality Parts,Customers Priority,Honest Operation,and Considerate Service”,our business mainly focus on the distribution of electronic components. Line cards we deal with include Microchip,ALPS,ROHM,Xilinx,Pulse,ON,Everlight and Freescale. Main products comprise IC,Modules,Potentiometer,IC Socket,Relay,Connector.Our parts cover such applications as commercial,industrial, and automotives areas.

We are looking forward to setting up business relationship with you and hope to provide you with the best service and solution. Let us make a better world for our industry!

Contact us

Tel: +86-755-8981 8866 Fax: +86-755-8427 6832
Email & Skype: info@chipsmall.com Web: www.chipsmall.com
Address: A1208, Overseas Decoration Building, #122 Zhenhua RD., Futian, Shenzhen, China

THIS DRAWING IS UNPUBLISHED. RELEASED FOR PUBLICATION ,19 .
© COPYRIGHT 19 BY AMP INCORPORATED. ALL RIGHTS RESERVED.

LOC	DIST
GE	33

REVISIONS

P	LTR	DESCRIPTION	DATE	DWN	APVD
	0	REL PER PR# 99-7	2-16-99	PC	WL
	A	REV PER OK40-0013-01	24AUG01	AG	MT

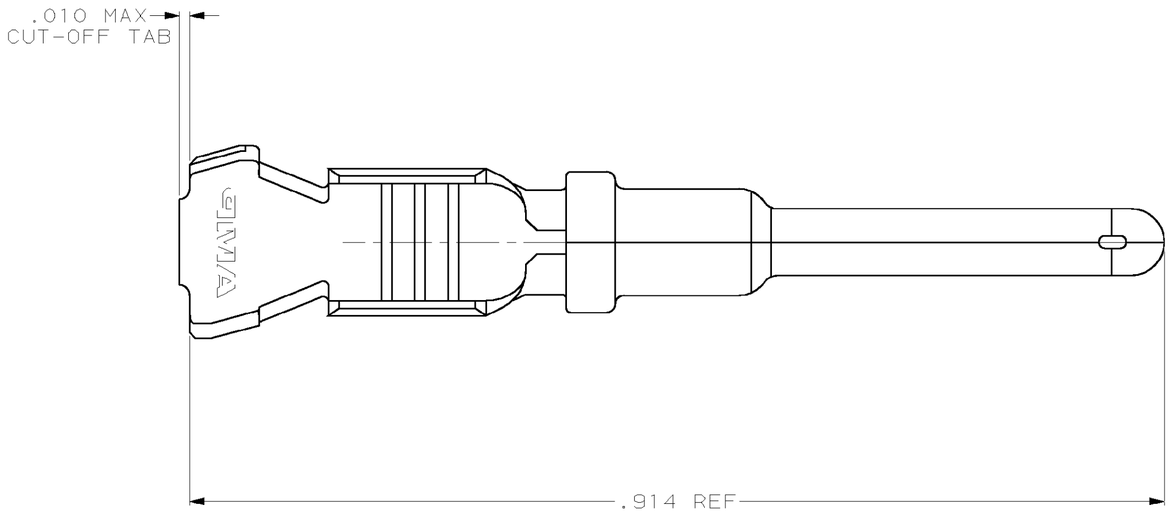

1. WIRE RANGE: 18-14 AWG

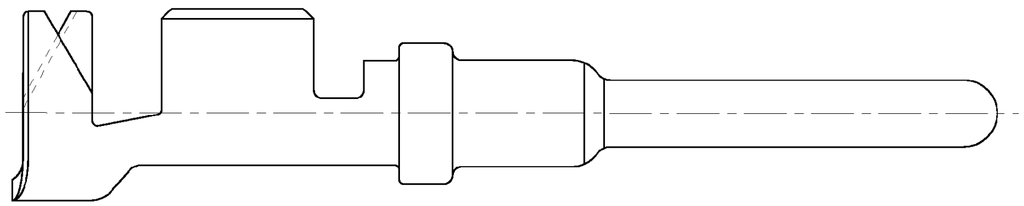

DESCRIPTION	FINISH	PART NUMBER
LOOSE PIECE VERSION OF 638078-3	NICKEL	776300-2
LOOSE PIECE VERSION OF 638078-1	GOLD	776300-1

THIS DRAWING IS A CONTROLLED DOCUMENT.

DIMENSIONS: mm

TOLERANCES UNLESS OTHERWISE SPECIFIED:
0 PLC ±-
1 PLC ±-
2 PLC ±0.5
3 PLC ±0.13
4 PLC ±-
ANGLES ±-

MATERIAL –
FINISH –

DWN P.COLLINS 2-16-99
CHK W.LONG 2-16-99
APVD G.MARPOE 2-16-99
PRODUCT SPEC –
APPLICATION SPEC –
WEIGHT –

AMP Incorporated
Harrisburg, PA 17105-3608

NAME PIN CONTACT, WIRE-TO-WIRE LOOSE PIECE

SIZE	CAGE CODE	DRAWING NO	RESTRICTED TO
A2	00779	C- 776300	–

CUSTOMER DRAWING | SCALE 10:1 | SHEET 1 OF 1 | REV A

776300

AMP 1471-9 REV 11JUN97

28-AUG-01 13:22:02 amp37325 /home/amp37325/edmread

Lead Free Conversion in Process - Refer to Specification 230-700 at www.tycoelectronics.com/leadfree