Chipsmall Limited consists of a professional team with an average of over 10 year of expertise in the distribution of electronic components. Based in Hongkong, we have already established firm and mutual-benefit business relationships with customers from,Europe,America and south Asia,supplying obsolete and hard-to-find components to meet their specific needs.

With the principle of “Quality Parts,Customers Priority,Honest Operation,and Considerate Service”,our business mainly focus on the distribution of electronic components. Line cards we deal with include Microchip,ALPS,ROHM,Xilinx,Pulse,ON,Everlight and Freescale. Main products comprise IC,Modules,Potentiometer,IC Socket,Relay,Connector.Our parts cover such applications as commercial,industrial, and automotives areas.

We are looking forward to setting up business relationship with you and hope to provide you with the best service and solution. Let us make a better world for our industry!

Contact us

Tel: +86-755-8981 8866 Fax: +86-755-8427 6832
Email & Skype: info@chipsmall.com Web: www.chipsmall.com
Address: A1208, Overseas Decoration Building, #122 Zhenhua RD., Futian, Shenzhen, China

DRAWING MADE IN THIRD ANGLE PROJECTION

THIS DRAWING IS UNPUBLISHED. RELEASED FOR PUBLICATION .19 .

© COPYRIGHT 19 BY AMP INCORPORATED. ALL INTERNATIONAL RIGHTS RESERVED.

LCC	DIST	P	F	ZONE	LTR	REVISIONS DESCRIPTION	DATE	APPD
GP	00				C	REVISED PER EC 0513-0029-03	27MAY03	JG

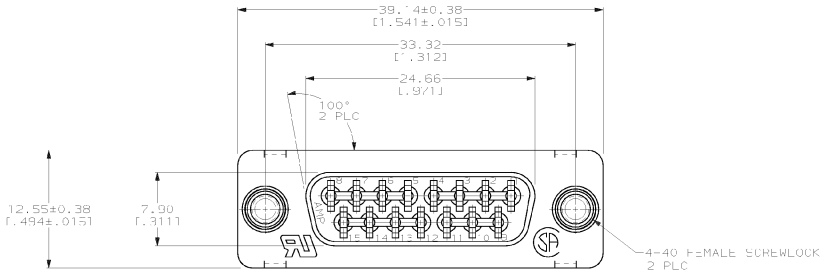

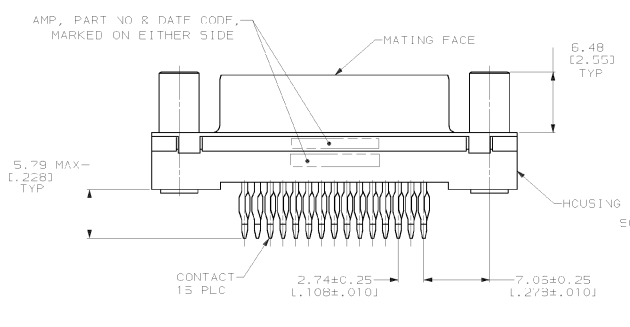

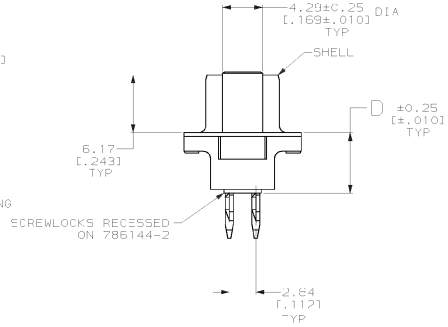

1. RECOMMENDATIONS FOR 2.36 [.093] MIN THICK PC BOARD:
   A. HOLE DIAMETER AFTER DRILLING = 1.14±0.03[.045±.001].
   B. HOLE DIAMETER AFTER TIN-LEAD PLATING = 0.94-1.09 [.037-.043].
   C. HOLE DIAMETER AFTER REFLOW = 0.91-1.09 [.036-.043].
   D. PC BOARD PLATING TO BE 7.62µm [.000300] MIN TIN-LEAD OVER 0.05±0.03[.002±.001] COPPER.
2. NYLON OR POLYESTER, UL 94V-0 RATED, GLASS FILLED, BLACK.
3. COPPER ALLOY PER ASTM B 122.
4. CARBON STEEL PER ASTM A 109.
5. BRASS PER QQ-B-626.
6. GOLD PLATING PER MIL-G-45204, NICKEL PLATING PER QQ-N-290, TIN PLATING PER MIL-T-10727, COPPER PLATING PER MIL-C-14550.
7. 5.08µm [.000200] MIN TIN-LEAD OVER 2.54µm [.000100] MIN COPPER.
8. 0.76µm [.000030] MIN GOLD FOR A LENGTH OF 1.02[.040] MIN FROM MATING END, 2.54µm [.000100] MIN TIN OR TIN-LEAD FOR A LENGTH OF 5.79[.228] MIN FROM OPPOSITE END, BOTH OVER 1.27µm [.000050] MIN NICKEL.
9. DATUMS AND BASIC DIMENSIONS ESTABLISHED BY CUSTOMERS.

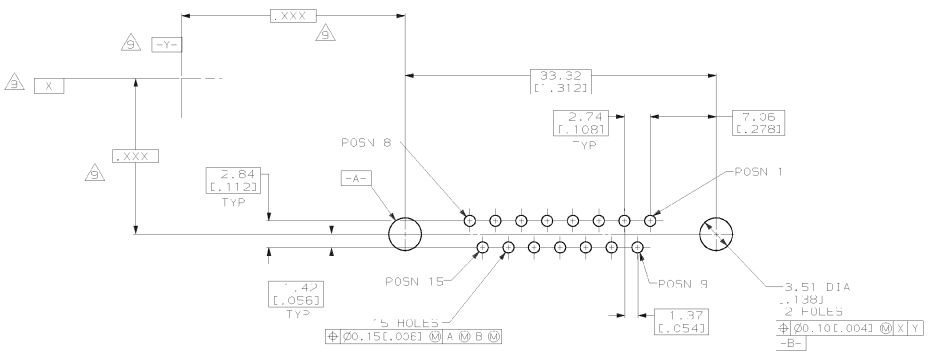

RECOMMENDED PC BOARD MOUNTING DIMENSIONS 1
CONNECTOR SIDE OF BOARD

CBS01 FTF	5.99 [.236]	786144-2
	6.48 [.255]	786144-1
	D	PART NUMBER

DO NOT SCALE PRINT.
UNLESS SPECIFIED
DIMENSIONS IN mm [INCHES]
TOLERANCES ON :
2 PLC DEC ± 0.3 [.005]
3 PLC DEC ± - -
ANGLES ± 2°

MATERIAL
HOUSING: 2 SCREWLOCKS: 5
CONTACTS: 3
SHELL: 4

FINISH 6
CONTACTS: 7
SHELL: 7

DR 1-31-92 C.OBERMAN
CHK 2-4-92 R.STONE
APPD 2-5-92 M.PERCHERKE
APPD 2-5-92 W.PARKER

PRODUCT SPEC
108-40014

APPLICATION SPEC
-

WEIGHT

AMP Incorporated
Harrisburg, PA 17105-3608

NAME
RECEPTACLE ASSEMBLY, SIZE 2, 15 POSITION, ACTION PIN,™ VERTICAL, FRONT METAL SHELL AMPLIMITE™ HD-20

SIZE	CAGE CODE	DRAWING NO
D	00779	786144
SCALE 4:1		SHEET 1 OF 1

CUSTOMER DRAWING

AMP 1726-3 REV 11-89

09-SEP-96 15:52:13 amp34723 /home/ssrv026d/dek04/deat4023/amp34723/ednncd