Chipsmall Limited consists of a professional team with an average of over 10 year of expertise in the distribution of electronic components. Based in Hongkong, we have already established firm and mutual-benefit business relationships with customers from,Europe,America and south Asia,supplying obsolete and hard-to-find components to meet their specific needs.

With the principle of “Quality Parts,Customers Priority,Honest Operation,and Considerate Service”,our business mainly focus on the distribution of electronic components. Line cards we deal with include Microchip,ALPS,ROHM,Xilinx,Pulse,ON,Everlight and Freescale. Main products comprise IC,Modules,Potentiometer,IC Socket,Relay,Connector.Our parts cover such applications as commercial,industrial, and automotives areas.

We are looking forward to setting up business relationship with you and hope to provide you with the best service and solution. Let us make a better world for our industry!

# Contact us

Tel: +86-755-8981 8866 Fax: +86-755-8427 6832
Email & Skype: info@chipsmall.com Web: www.chipsmall.com
Address: A1208, Overseas Decoration Building, #122 Zhenhua RD., Futian, Shenzhen, China

THIS DRAWING IS UNPUBLISHED. RELEASED FOR PUBLICATION ,19 .
© COPYRIGHT 19 BY AMP INCORPORATED. ALL RIGHTS RESERVED.

| JC | DIST |
|---|---|
| J | 00 |

REVISIONS

| ZONE | LTR | DESCRIPTION | DATE | DWN | APVD |
|---|---|---|---|---|---|
| | K | REVISED PER EC 0513-0489-03 | 05JAN04 | JG | JG |

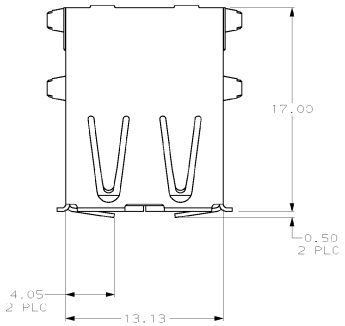


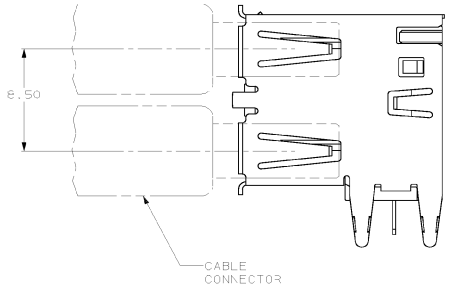


1. MATERIAL:
   SHELL & CONTACTS- COPPER ALLOY.
   HOUSING- UL 94V-0 RATED, THERMOPLASTIC, SEE TABLE.
2. PLATING:
   CONTACTS- 0.076µm MINIMUM GOLD OVER 0.76µm MINIMUM PALLADIUM-NICKEL ON MATING AREA. OR CONTACT ALTERNATE PLATING 0.76µm MINIMUM GOLD ON MATING AREA.
   3.80µm MINIMUM TIN-LEAD ON SOLDER TAILS.
   BOTH OVER 1.27µm MINIMUM NICKEL.
   SHELL: 5.10µm MINIMUM BRIGHT TIN OVER 2.50µm MINIMUM COPPER.
3. DATUM AND BASIC DIMENSIONS ESTABLISHED BY CUSTOMER.
4. RECOMMENDED PC BOARD THICKNESS OF 1.57.

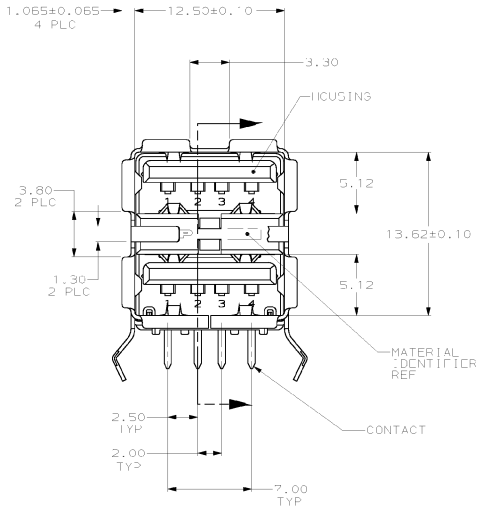


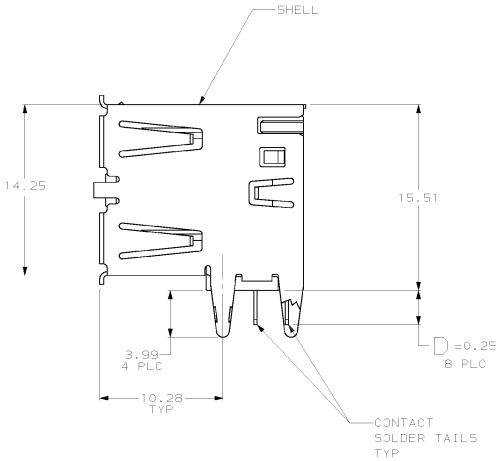


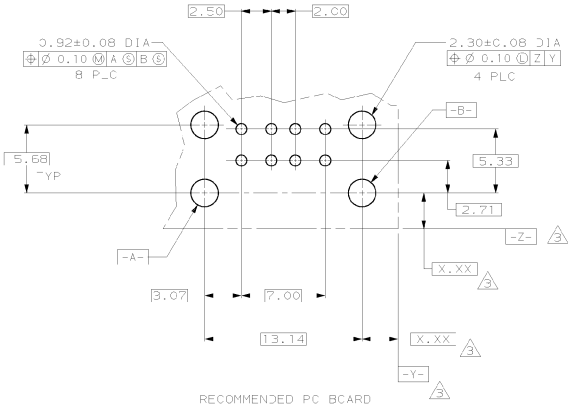


RECOMMENDED PC BOARD
MOUNTING DIMENSIONS
4

| OBSOLETE | HIGH TEMPERATURE COMPATIBLE | D | HOUSING COLOR | PART NUMBER |
|---|---|---|---|---|
| | YES | 2.84±0.25 | NATURAL | 787745-6 |
| | YES | 2.29±0.25 | BLACK | 787745-5 |
| | YES | 2.84±0.25 | BLACK | 787745-4 |
| | NO | 2.84±0.25 | NATURAL | 787745-3 |
| | NO | 2.29±0.25 | BLACK | 787745-2 |
| | NO | 2.84±0.25 | BLACK | 787745-1 |

THIS DRAWING IS A CONFIDENTIAL PROPRIETARY DOCUMENT. IT IS SUBJECT TO COPYRIGHT, PATENT, TRADE SECRET AND PROPRIETARY INFORMATION. SHOULD BE CONTACTED FOR THE LATEST REVISION.

DIMENSIONS: MM
TOLERANCES UNLESS OTHERWISE SPECIFIED:
0 PLC ±-
1 PLC ±-
2 PLC ±0.13
3 PLC ±-
4 PLC ±-
ANGLES -
MATERIAL 1
FINISH 2

DWN JG. BROCKWAY 10 MAY 96
CHK T. STONE 13 MAY 96
APVD R. MALTER 14 MAY 96
PRODUCT SPEC 108-1583
APPLICATION SPEC 114-40054
WEIGHT -
CUSTOMER DRAWING

AMP Incorporated
Harrisburg, PA 17105-3608

NAME
RECEPTACLE ASSEMBLY, RIGHT ANGLE, STACKED, THRU-HOLE, USB

SIZE A1 CAGE CODE 00779 DRAWING NO C-787745

SCALE 5:1 SHEET 1 OF 1 REV K

AMP 40G5 REV 09FA1994

11-NOV-03 13:10:03 b8420 /ad/walesley/job7