Chipsmall Limited consists of a professional team with an average of over 10 year of expertise in the distribution of electronic components. Based in Hongkong, we have already established firm and mutual-benefit business relationships with customers from,Europe,America and south Asia,supplying obsolete and hard-to-find components to meet their specific needs.

With the principle of “Quality Parts,Customers Priority,Honest Operation,and Considerate Service”,our business mainly focus on the distribution of electronic components. Line cards we deal with include Microchip,ALPS,ROHM,Xilinx,Pulse,ON,Everlight and Freescale. Main products comprise IC,Modules,Potentiometer,IC Socket,Relay,Connector.Our parts cover such applications as commercial,industrial, and automotives areas.

We are looking forward to setting up business relationship with you and hope to provide you with the best service and solution. Let us make a better world for our industry!

Contact us

Tel: +86-755-8981 8866 Fax: +86-755-8427 6832
Email & Skype: info@chipsmall.com Web: www.chipsmall.com
Address: A1208, Overseas Decoration Building, #122 Zhenhua RD., Futian, Shenzhen, China

THIS DRAWING IS UNPUBLISHED. RELEASED FOR PUBLICATION ,19 .
© COPYRIGHT 19 BY AMP INCORPORATED. ALL RIGHTS RESERVED.

LOC	DIST
FT	60

REVISIONS

P	LTR	DESCRIPTION	DATE	DWN	APVD
	0	RLSE PER NPR 29 WAS 96-3951-1-2	20 MAR 97	–	–
	A	ADDED -2 PER EC 0320-396-97	18 NOV 97	MB	MM

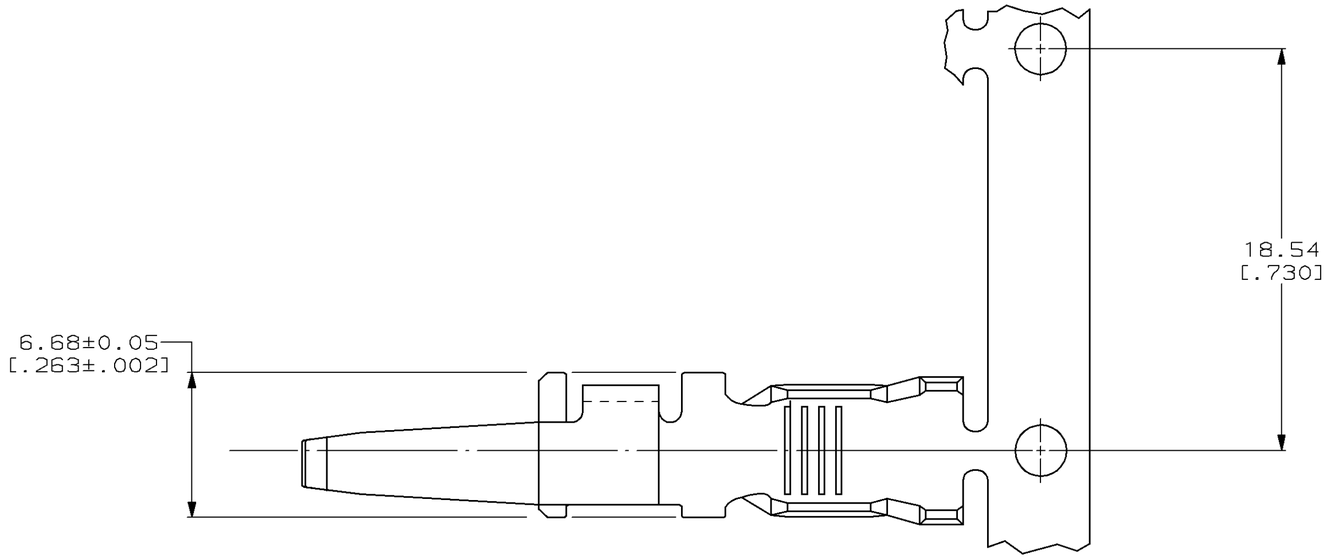

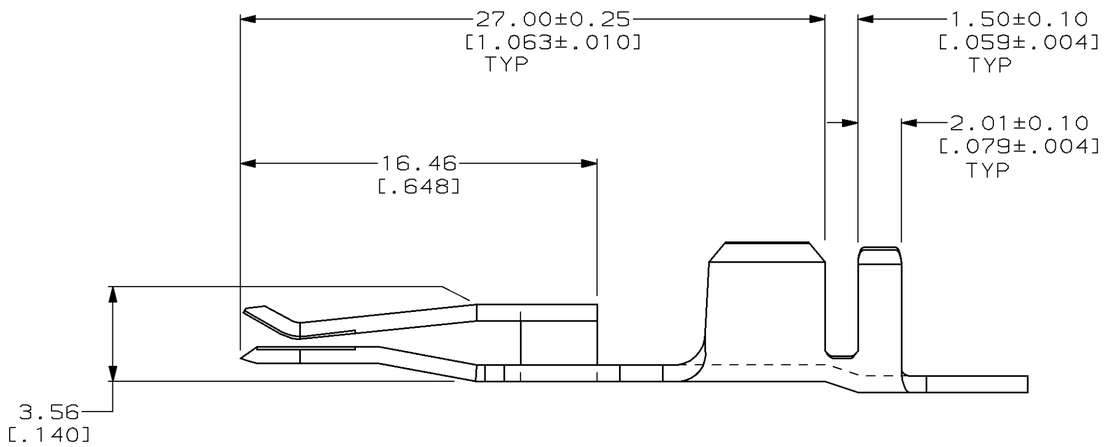

1. ZIRCONIUM COPPER ALLOY
2. 2.54µm [.000100] MIN TIN.
3. WIRE BARREL WILL ACCEPT ONE 10 OR 12 AWG COPPER WIRE OR COMBINATIONS OF 12 THRU 18 AWG COPPER WIRE, INSULATION Ø 3.70-4.30[.146-.169].

REVERSE	788110-2
STANDARD	788110-1
REELING	PART NUMBER

THIS DRAWING IS A CONTROLLED DOCUMENT.

DIMENSIONS: mm [INCHES]

TOLERANCES UNLESS OTHERWISE SPECIFIED:
0 PLC ±-
1 PLC ±-
2 PLC ±0.13 [.005]
3 PLC ±-
4 PLC ±-
ANGLES ±-

MATERIAL 1
FINISH 2

DWN C.OBERMAN 20 MAR 97
CHK R.STONE 20 MAR 97
APVD M.McALONIS 20 MAR 97
PRODUCT SPEC 108-1373
APPLICATION SPEC 114-6051
WEIGHT –

AMP Incorporated
Harrisburg, PA 17105-3608

NAME TERMINAL, 12-10 AWG, F CRIMP W/ INSULATION CRIMP, WTW, AMPINNERGY™

SIZE	CAGE CODE	DRAWING NO	RESTRICTED TO
A2	00779	C-788110	–

CUSTOMER DRAWING SCALE 5:1 SHEET 1 OF 1 REV A

788110