Chipsmall Limited consists of a professional team with an average of over 10 year of expertise in the distribution of electronic components. Based in Hongkong, we have already established firm and mutual-benefit business relationships with customers from,Europe,America and south Asia,supplying obsolete and hard-to-find components to meet their specific needs.

With the principle of “Quality Parts,Customers Priority,Honest Operation,and Considerate Service”,our business mainly focus on the distribution of electronic components. Line cards we deal with include Microchip,ALPS,ROHM,Xilinx,Pulse,ON,Everlight and Freescale. Main products comprise IC,Modules,Potentiometer,IC Socket,Relay,Connector.Our parts cover such applications as commercial,industrial, and automotives areas.

We are looking forward to setting up business relationship with you and hope to provide you with the best service and solution. Let us make a better world for our industry!

# Contact us

Tel: +86-755-8981 8866 Fax: +86-755-8427 6832
Email & Skype: info@chipsmall.com Web: www.chipsmall.com
Address: A1208, Overseas Decoration Building, #122 Zhenhua RD., Futian, Shenzhen, China

THIS DRAWING IS UNPUBLISHED. RELEASED FOR PUBLICATION .19
COPYRIGHT 19 BY AMP INCORPORATED. ALL RIGHTS RESERVED.

| REVISIONS | | | | |
|---|---|---|---|---|
| LTR | DESCRIPTION | DATE | DWN |
| D | RLSD PER PR CM 97-82 | 7-08-97 | BL |

1. DIMENSIONS IN BRACKETS ARE IN INCHES.

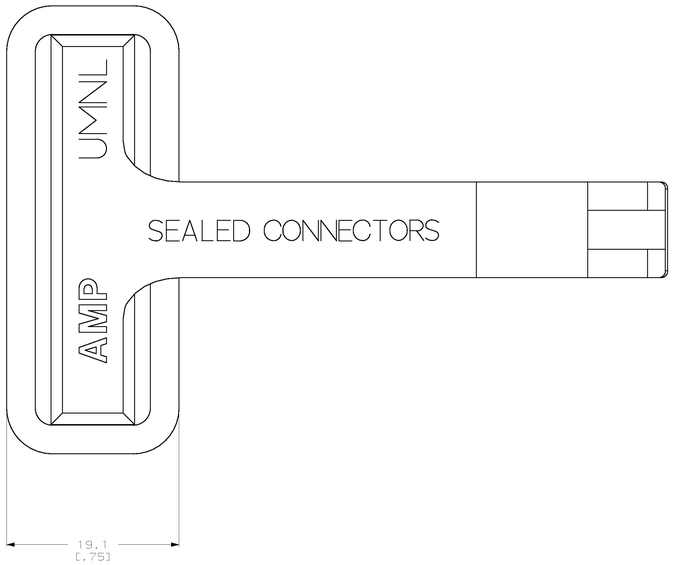


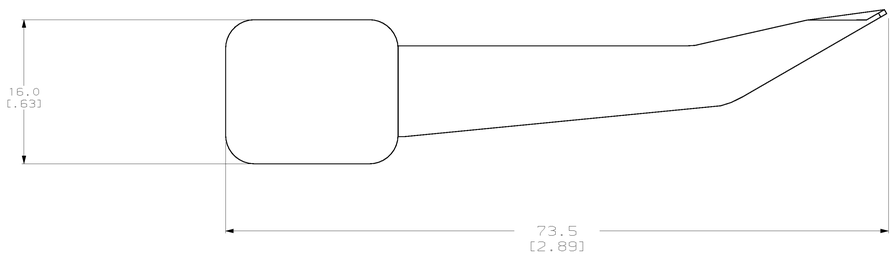


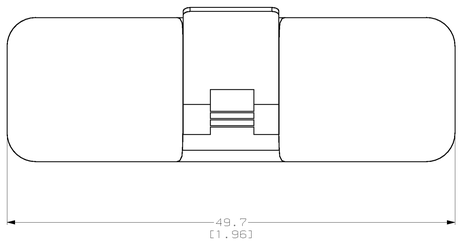


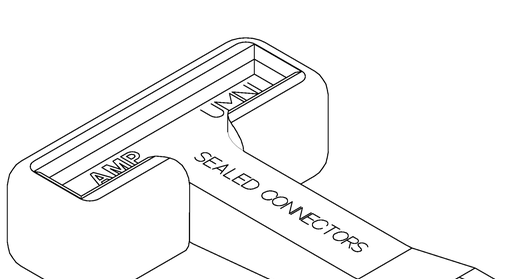


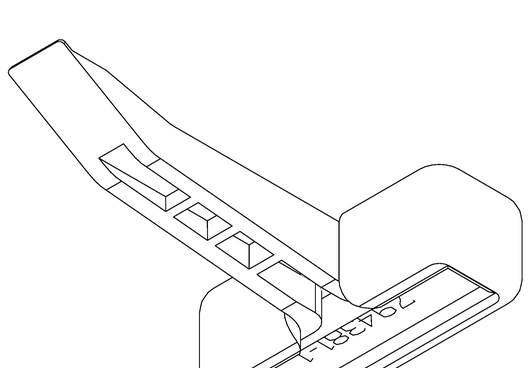


3-DIMENSIONAL MODEL
NTS

794381-1
PART NUMBER

METRIC

THIS DRAWING IS A CONTROLLED DOCUMENT.

DIMENSIONS: mm [INCHES]

TOLERANCES UNLESS OTHERWISE SPECIFIED:
.0 PLC ±-
.00 PLC ±-
.000 PLC ±-
.0000 PLC ±0.13 [.005]
ANGLES ±-

MATERIAL: NYLON,UL94V-0, BLACK
FINISH: –

DWN B. LEWIS 7-08-97
CHK B. SWING 7-08-97
APVD J. SELF 7-08-97
PRODUCT SPEC –
APPLICATION SPEC –
WEIGHT –

CUSTOMER DRAWING

AMP
AMP Incorporated
Harrisburg, PA 17105-3

TITLE SEALED CONNECTOR LATCH TOOL

| SIZE | CAGE CODE | DRAWING NO | RESTRICTED |
|---|---|---|---|
| A0 | 00779 | C-794381 | – |

SCALE 4:1 SHEET 1 OF 1 REV –