Chipsmall Limited consists of a professional team with an average of over 10 year of expertise in the distribution of electronic components. Based in Hongkong, we have already established firm and mutual-benefit business relationships with customers from,Europe,America and south Asia,supplying obsolete and hard-to-find components to meet their specific needs.

With the principle of “Quality Parts,Customers Priority,Honest Operation,and Considerate Service”,our business mainly focus on the distribution of electronic components. Line cards we deal with include Microchip,ALPS,ROHM,Xilinx,Pulse,ON,Everlight and Freescale. Main products comprise IC,Modules,Potentiometer,IC Socket,Relay,Connector.Our parts cover such applications as commercial,industrial, and automotives areas.

We are looking forward to setting up business relationship with you and hope to provide you with the best service and solution. Let us make a better world for our industry!

Contact us

Tel: +86-755-8981 8866 Fax: +86-755-8427 6832
Email & Skype: info@chipsmall.com Web: www.chipsmall.com
Address: A1208, Overseas Decoration Building, #122 Zhenhua RD., Futian, Shenzhen, China

THIS DRAWING IS UNPUBLISHED. RELEASED FOR PUBLICATION -
© COPYRIGHT 20 BY - ALL RIGHTS RESERVED.

LOC	DIST
CM	53

REVISIONS

P	LTR	DESCRIPTION	DATE	DWN	APVD
	H3	REVISED PER ECO-11-025415	20DEC11	JR	TM

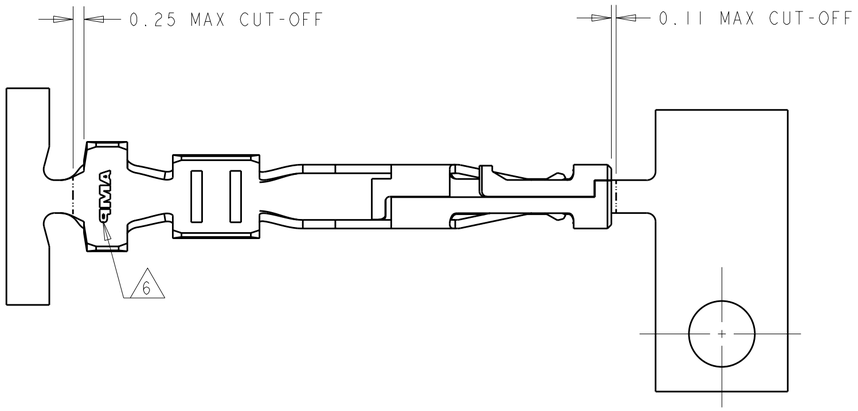

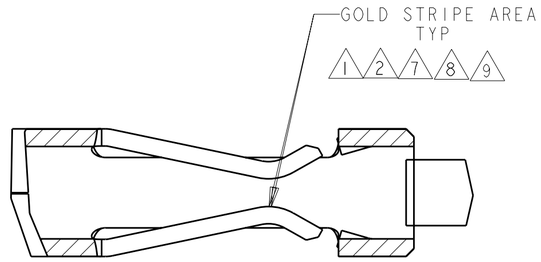

SECTION C-C
SCALE 20:1

1. 0.000762 MIN THK GOLD STRIPE IN THE GOLD PLATE AREA, BRIGHT TIN IN THE CRIMP AREA, OVER NICKEL PLATE.
2. 0.000381 THK GOLD STRIPE IN THE GOLD PLATE AREA, BRIGHT TIN IN THE CRIMP AREA, OVER NICKEL PLATE.
3. 0.0015 - 0.0040 THK BRIGHT TIN.
4. WIRE RANGE: 20 - 24 AWG.
5. INSULATION RANGE 0.89 - 1.524.
6. AMP LOGO LOCATED APPROXIMATELY AS SHOWN.
7. 0.000762 THK GOLD STRIPE IN THE GOLD PLATE AREA, BRIGHT TIN-LEAD IN THE CRIMP AREA, OVER NICKEL PLATE.
8. 0.000381 THK GOLD STRIPE IN THE GOLD PLATE AREA, BRIGHT TIN-LEAD IN THE CRIMP AREA, OVER NICKEL PLATE.
9. 0.00102 MIN THK GOLD STRIPE IN THE GOLD PLATE AREA, BRIGHT TIN IN THE CRIMP AREA, OVER NICKEL PLATE.

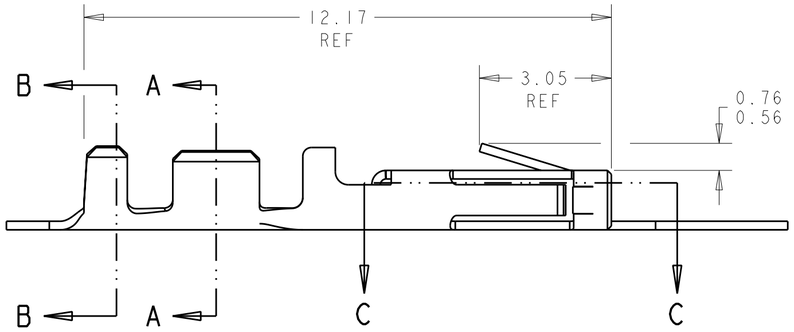

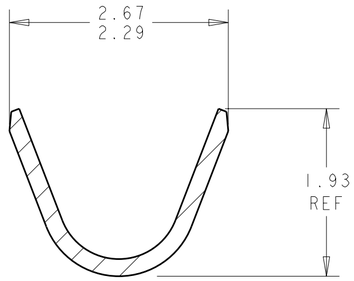

SECTION B-B
SCALE 20:1

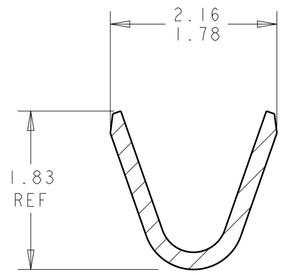

SECTION A-A
SCALE 20:1

9	1-794606-3
1	1-794606-2
2	1-794606-1
7	794606-3
8	794606-2
3	794606-1
FINISH	PART NUMBER

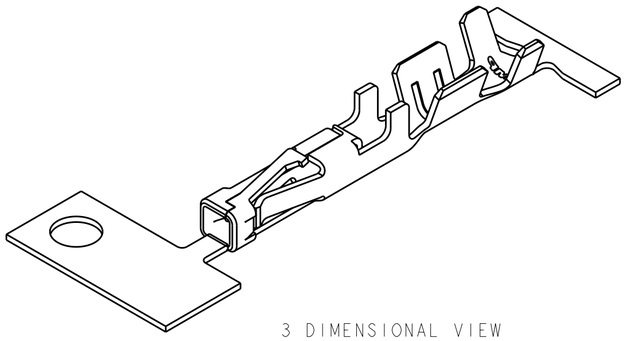

3 DIMENSIONAL VIEW
SCALE 8:1

METRIC

THIS DRAWING IS A CONTROLLED DOCUMENT.

DIMENSIONS: mm

TOLERANCES UNLESS OTHERWISE SPECIFIED:
0 PLC ±-
1 PLC ±-
2 PLC ±0.13
3 PLC ±-
4 PLC ±-
ANGLES ±030'

MATERIAL: 0.2 PH BRZ
FINISH: SEE TABLE

DWN K. WHITAKER 12-OCT-1999
CHK K. COBLE 12-OCT-1999
APVD K. COBLE 12-OCT-1999
PRODUCT SPEC: 108-1836
APPLICATION SPEC: -
WEIGHT: -

TE Connectivity

NAME: CONTACT, RECEPTACLE, CRIMP, SNAP-IN, MICRO MATE-N-LOK(TM)

SIZE A2 | CAGE CODE 00779 | DRAWING NO C-794606 | RESTRICTED TO -

CUSTOMER DRAWING | SCALE 10:1 | SHEET 1 OF 1 | REV H3

794606

1471-9 (3/11)

Pro/ENGINEER DRAWING