Chipsmall Limited consists of a professional team with an average of over 10 year of expertise in the distribution of electronic components. Based in Hongkong, we have already established firm and mutual-benefit business relationships with customers from,Europe,America and south Asia,supplying obsolete and hard-to-find components to meet their specific needs.

With the principle of “Quality Parts,Customers Priority,Honest Operation,and Considerate Service”,our business mainly focus on the distribution of electronic components. Line cards we deal with include Microchip,ALPS,ROHM,Xilinx,Pulse,ON,Everlight and Freescale. Main products comprise IC,Modules,Potentiometer,IC Socket,Relay,Connector.Our parts cover such applications as commercial,industrial, and automotives areas.

We are looking forward to setting up business relationship with you and hope to provide you with the best service and solution. Let us make a better world for our industry!

Contact us

Tel: +86-755-8981 8866 Fax: +86-755-8427 6832
Email & Skype: info@chipsmall.com Web: www.chipsmall.com
Address: A1208, Overseas Decoration Building, #122 Zhenhua RD., Futian, Shenzhen, China

THIS DRAWING IS UNPUBLISHED. RELEASED FOR PUBLICATION 20
© COPYRIGHT 20 BY TYCO ELECTRONICS CORPORATION. ALL RIGHTS RESERVED.

LOC	DIST
CM	00

REVISIONS

P	LTR	DESCRIPTION	DATE	DWN	APVD
	B	REVISED PER 0G3B-0289-03	24-JUN-03	KW	CJ
	C	REVISED PER 0G3B-1055-04	05JAN05	KW	CJ
	C1	REVISED PER ECO-05-015508	24FEB06	KW	CJ

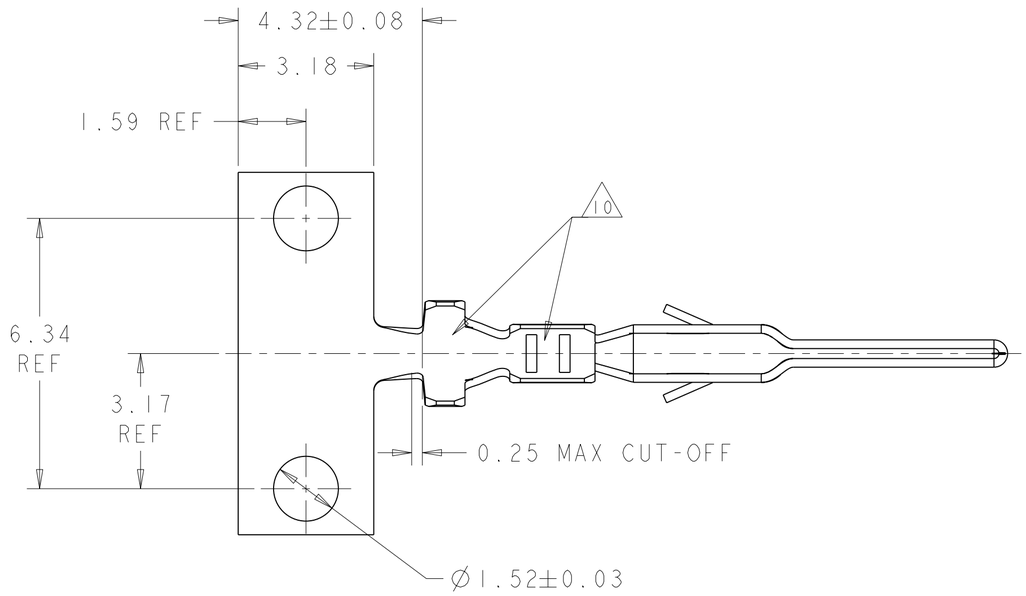

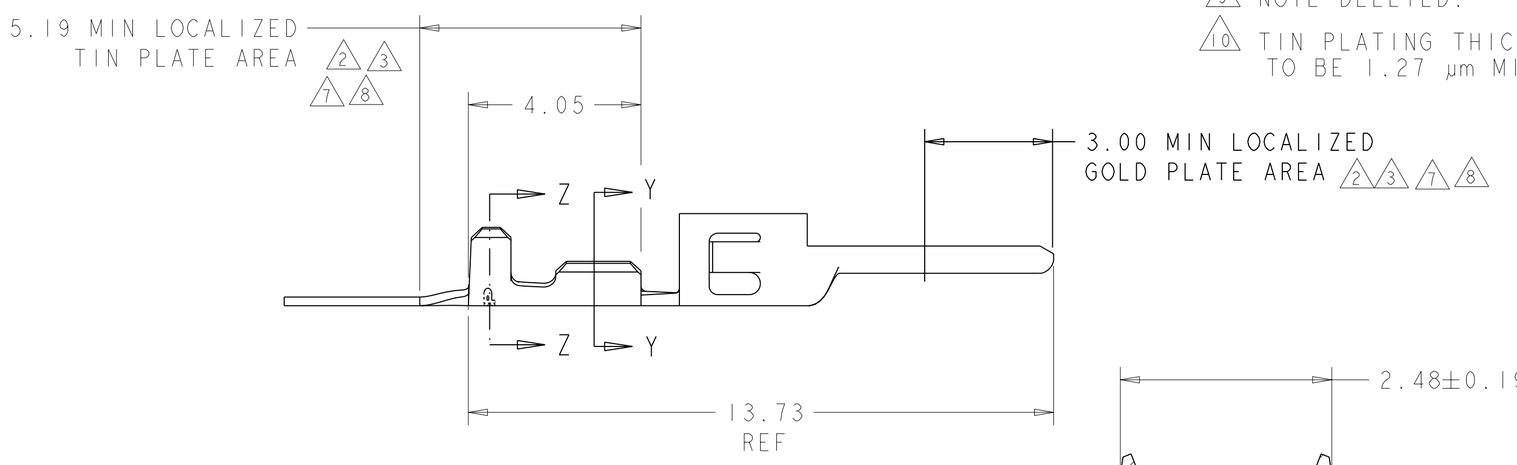

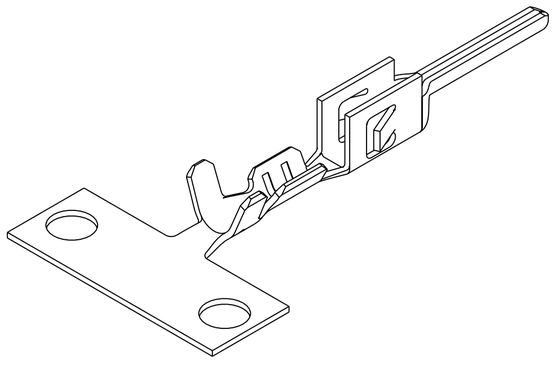

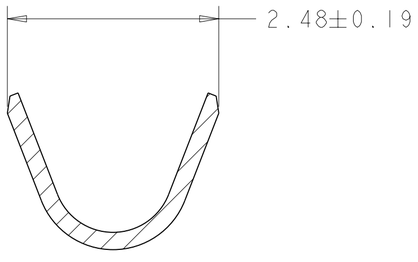

SECTION Z-Z
SCALE 20:1

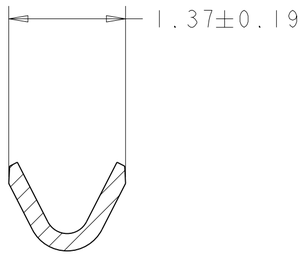

SECTION Y-Y
SCALE 20:1

1. 2.54-6.35 µm MIN BRIGHT TIN/LEAD ENTIRE STOCK OVER 1.27-3.81 µm MIN NICKEL ENTIRE STOCK.
2. 0.38 µm MIN GOLD IN LOCALIZED GOLD PLATE AREA, 2.54-6.35 µm MIN BRIGHT TIN/LEAD IN LOCALIZED TIN/LEAD PLATE AREA, BOTH OVER 1.27-3.81 µm MIN NICKEL ON ENTIRE STOCK.
3. 0.76 µm MIN GOLD IN LOCALIZED GOLD PLATE AREA, 2.54-6.35 µm MIN BRIGHT TIN/LEAD IN LOCALIZED TIN/LEAD PLATE AREA, BOTH OVER 1.27-3.81 µm MIN NICKEL ON ENTIRE STOCK.
4. WIRE RANGE 26-30 AWG.
5. INSULATION RANGE 0.89-1.52
6. 2.54-6.35 µm MIN BRIGHT TIN ENTIRE STOCK OVER 1.27-3.81 µm MIN NICKEL ENTIRE STOCK.
7. 0.38 µm MIN GOLD IN LOCALIZED GOLD PLATE AREA, 2.54-6.35 µm MIN BRIGHT TIN IN LOCALIZED TIN PLATE AREA, BOTH OVER 1.27-3.81 µm MIN NICKEL ON ENTIRE STOCK.
8. 0.76 µm MIN GOLD IN LOCALIZED GOLD PLATE AREA, 2.54-6.35 µm MIN BRIGHT TIN IN LOCALIZED TIN PLATE AREA, BOTH OVER 1.27-3.81 µm MIN NICKEL ON ENTIRE STOCK.
9. NOTE DELETED.
10. TIN PLATING THICKNESS INSIDE WIRE AND INSULATION BARRELS TO BE 1.27 µm MIN.

FINISH	PART NUMBER
8	1-794609-2
7	1-794609-1
6	1-794609-0
3	794609-3
2	794609-2
1	794609-1

METRIC

THIS DRAWING IS A CONTROLLED DOCUMENT FOR TYCO ELECTRONICS CORPORATION. IT IS SUBJECT TO CHANGE AND THE CONTROLLING ENGINEERING ORGANIZATION SHOULD BE CONTACTED FOR THE LATEST REVISION.

DIMENSIONS: mm

TOLERANCES UNLESS OTHERWISE SPECIFIED:
0 PLC ±-
1 PLC ±-
2 PLC ±0.13
3 PLC ±-
4 PLC ±-
ANGLES ±-

MATERIAL 0.20 THK BRASS
FINISH -

DWN W J RUDY 29AUG2000
CHK W DAVIS 29AUG2000
APVD W DAVIS 29AUG2000
PRODUCT SPEC -
APPLICATION SPEC -
WEIGHT -

tyco Electronics
Tyco Electronics
Harrisburg, PA 17105-3608

NAME PLUG CONTACT, CRIMP SNAP, 26-30 AWG, MICRO MATE-N-LOK(TM)
-

SIZE	CAGE CODE	DRAWING NO	RESTRICTED TO
A2	00779	C-794609	-

CUSTOMER DRAWING | SCALE 10:1 | SHEET 1 OF 1 | REV C1