Chipsmall Limited consists of a professional team with an average of over 10 year of expertise in the distribution of electronic components. Based in Hongkong, we have already established firm and mutual-benefit business relationships with customers from,Europe,America and south Asia,supplying obsolete and hard-to-find components to meet their specific needs.

With the principle of “Quality Parts,Customers Priority,Honest Operation,and Considerate Service”,our business mainly focus on the distribution of electronic components. Line cards we deal with include Microchip,ALPS,ROHM,Xilinx,Pulse,ON,Everlight and Freescale. Main products comprise IC,Modules,Potentiometer,IC Socket,Relay,Connector.Our parts cover such applications as commercial,industrial, and automotives areas.

We are looking forward to setting up business relationship with you and hope to provide you with the best service and solution. Let us make a better world for our industry!

Contact us

Tel: +86-755-8981 8866 Fax: +86-755-8427 6832
Email & Skype: info@chipsmall.com Web: www.chipsmall.com
Address: A1208, Overseas Decoration Building, #122 Zhenhua RD., Futian, Shenzhen, China

THIS DRAWING IS UNPUBLISHED. RELEASED FOR PUBLICATION -,- .
© COPYRIGHT - By - ALL RIGHTS RESERVED.

LOC	DIST
CM	00

REVISIONS

P	LTR	DESCRIPTION	DATE	DWN	APVD
	E	ECO-13-000901	08MAR2013	MGT	R.P

1. WIRE RANGE: 0.3 – 0.9MM² (22–18 AWG).
2. INSULATION RANGE: 1.50–2.40[.060–.094] DIA.
3. DIMENSIONS IN BRACKETS ARE IN INCHES.
4. BOTTOM CONTACT STOP IS OPTIONAL CONSTRUCTION.
5. 0.000762 [.000030] MIN GOLD IN LOCALIZED GOLD PLATE AREA AND 0.00254 [.000100] MIN BRIGHT TIN LOCALIZED TIN PLATE AREA OVER 0.00127 [.000050] MIN NICKEL.

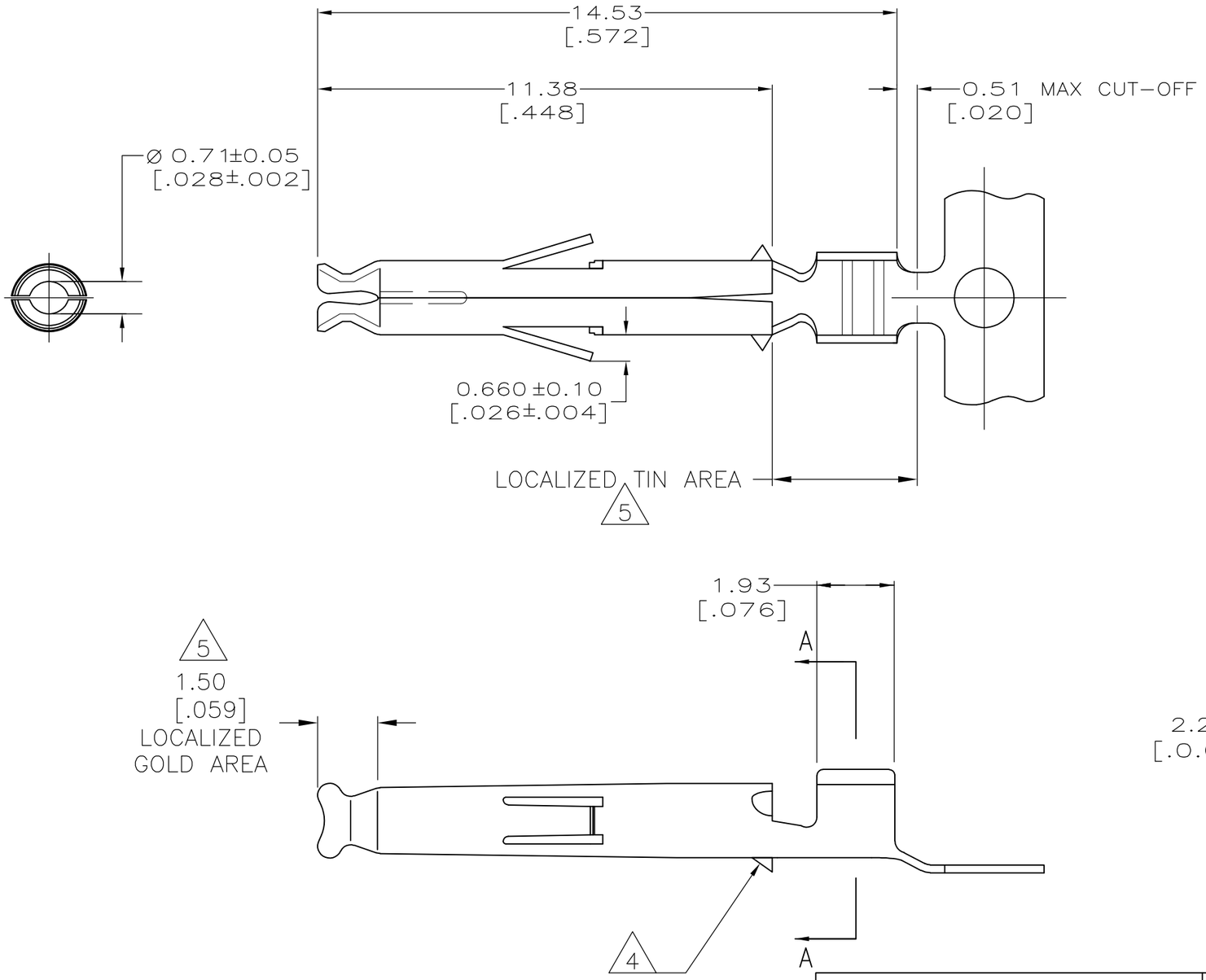

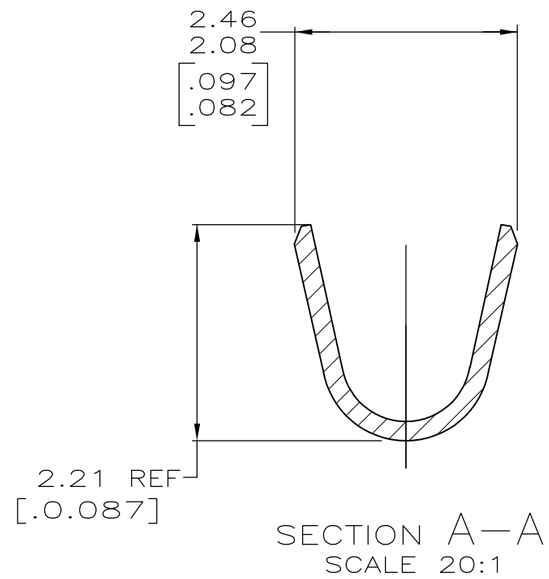

5	0.20 [.008] BRASS	794831–3
NONE	0.20 [.008] BRASS	794831–2
PRE–TIN	0.20 [.008] BRASS	794831–1
FINISH	MATERIAL	PART NO

THIS DRAWING IS A CONTROLLED DOCUMENT.

DIMENSIONS: mm [INCHES]

TOLERANCES UNLESS OTHERWISE SPECIFIED:

0 PLC	± –
1 PLC	± –
2 PLC	± 0.13 [.005]
3 PLC	± –
4 PLC	± –
ANGLES	± 0°30'

MATERIAL –

FINISH –

METRIC

DWN	K. WHITAKER	20FEB2004
CHK	C. JONES	20FEB04
APVD	C. JONES	20FEB04
PRODUCT SPEC	—	
APPLICATION SPEC	—	
WEIGHT	—	

TE Connectivity

NAME: SOCKET, MINI UNIVERSAL MATE–N–LOK(TM)

SIZE	CAGE CODE	DRAWING NO	RESTRICTED TO
A3	00779	C–794831	—

CUSTOMER DRAWING

SCALE	SHEET	REV
8:1	1 OF 1	E