Chipsmall Limited consists of a professional team with an average of over 10 year of expertise in the distribution of electronic components. Based in Hongkong, we have already established firm and mutual-benefit business relationships with customers from,Europe,America and south Asia,supplying obsolete and hard-to-find components to meet their specific needs.

With the principle of “Quality Parts,Customers Priority,Honest Operation,and Considerate Service”,our business mainly focus on the distribution of electronic components. Line cards we deal with include Microchip,ALPS,ROHM,Xilinx,Pulse,ON,Everlight and Freescale. Main products comprise IC,Modules,Potentiometer,IC Socket,Relay,Connector.Our parts cover such applications as commercial,industrial, and automotives areas.

We are looking forward to setting up business relationship with you and hope to provide you with the best service and solution. Let us make a better world for our industry!

Contact us

Tel: +86-755-8981 8866 Fax: +86-755-8427 6832
Email & Skype: info@chipsmall.com Web: www.chipsmall.com
Address: A1208, Overseas Decoration Building, #122 Zhenhua RD., Futian, Shenzhen, China

THIS DRAWING IS UNPUBLISHED. RELEASED FOR PUBLICATION ,19 .
© COPYRIGHT 19 BY AMP INCORPORATED. ALL RIGHTS RESERVED.

LOC	DIST
BD	62

REVISIONS

P	LTR	DESCRIPTION	DATE	DWN	APVD
	O	RLSE -1 PER NPR 5690, WAS 97-4163-76	04 FEB 98	-	-
	A	REV PER EC 0G40-147-98	22 MAY 98	PB	PR
	B	REV PER 0G40-504-98	11 DEC 98	BC	PR
	C	REV PER 0S20-0306-02	03JUN02	TS	RF
	D	REVISE PER 0S20-0934-03	24DEC03	EC	RF

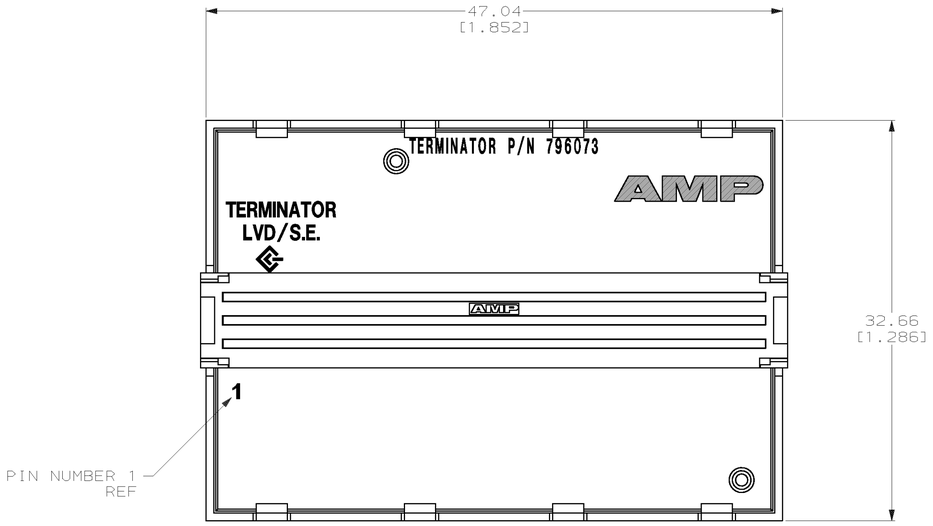

SIGNAL NAME (SINGLE-ENDED MODE)	SIGNAL NAME (LVD MODE)	CABLE CONDUCTOR NUMBER		SIGNAL NAME (LVD MODE)	SIGNAL NAME (SINGLE-ENDED MODE)
GROUND	+DB(12)	1	2	-DB(12)	-DB(12)
GROUND	+DB(13)	3	4	-DB(13)	-DB(13)
GROUND	+DB(14)	5	6	-DB(14)	-DB(14)
GROUND	+DB(15)	7	8	-DB(15)	-DB(15)
GROUND	+DB(P1)	9	10	-DB(P1)	-DB(P1)
GROUND	+DB(0)	11	12	-DB(0)	-DB(0)
GROUND	+DB(1)	13	14	-DB(1)	-DB(1)
GROUND	+DB(2)	15	16	-DB(2)	-DB(2)
GROUND	+DB(3)	17	18	-DB(3)	-DB(3)
GROUND	+DB(4)	19	20	-DB(4)	-DB(4)
GROUND	+DB(5)	21	22	-DB(5)	-DB(5)
GROUND	+DB(6)	23	24	-DB(6)	-DB(6)
GROUND	+DB(7)	25	26	-DB(7)	-DB(7)
GROUND	+DB(P)	27	28	-DB(P)	-DB(P)
GROUND	GROUND	29	30	GROUND	GROUND
GROUND	DIFFSENS	31	32	GROUND	GROUND
TERMPWR	TERMPWR	33	34	TERMPWR	TERMPWR
TERMPWR	TERMPWR	35	36	TERMPWR	TERMPWR
OPEN	OPEN	37	38	OPEN	OPEN
GROUND	GROUND	39	40	GROUND	GROUND
GROUND	+ATN	41	42	-ATN	-ATN
GROUND	GROUND	43	44	GROUND	GROUND
GROUND	+BSY	45	46	-BSY	-BSY
GROUND	+ACK	47	48	-ACK	-ACK
GROUND	+RST	49	50	-RST	-RST
GROUND	+MSG	51	52	-MSG	-MSG
GROUND	+SEL	53	54	-SEL	-SEL
GROUND	+C/D	55	56	-C/D	-C/D
GROUND	+REQ	57	58	-REQ	-REQ
GROUND	+I/O	59	60	-I/O	-I/O
GROUND	+DB(8)	61	62	-DB(8)	-DB(8)
GROUND	+DB(9)	63	64	-DB(9)	-DB(9)
GROUND	+DB(10)	65	66	-DB(10)	-DB(10)
GROUND	+DB(11)	67	68	-DB(11)	-DB(11)

CONTACT ASSIGNMENT TABLE

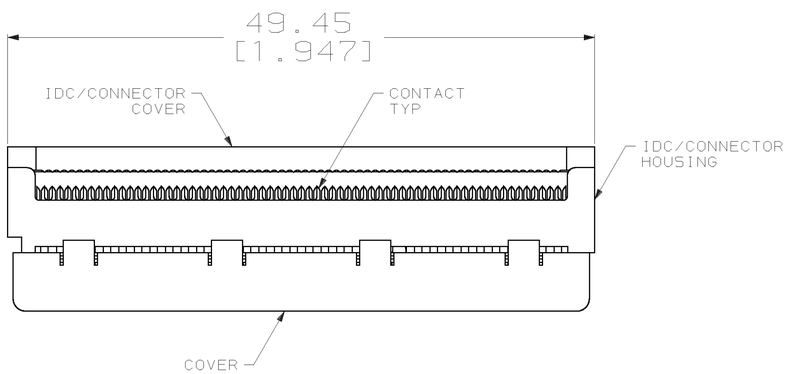

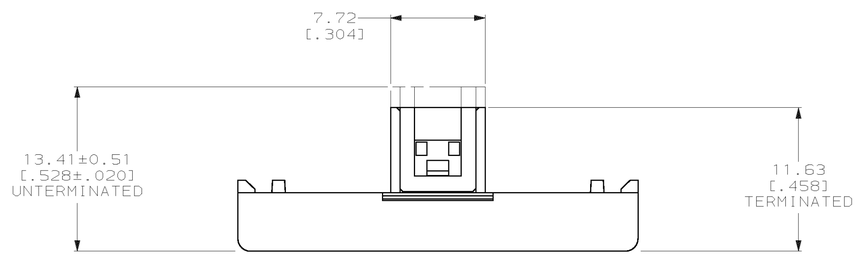

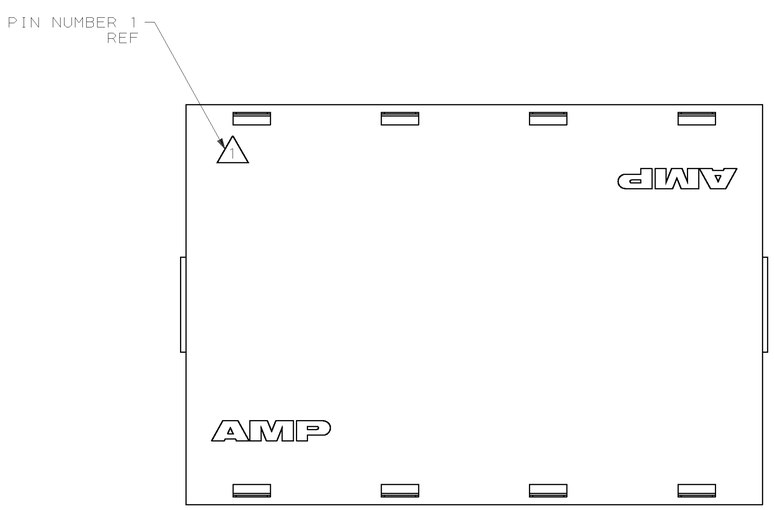

1. IDC/CONNECTOR HOUSING: LCP, BLACK, UL 94V-0 RATED.
   IDC/CONNECTOR COVER: POLYESTER, BLACK OR GREY, UL 94V-0 RATED.
   COVER: ABS, BLACK, UL 94V-0 RATED.
   CONTACTS: BERYLLIUM COPPER.
   PRINTED CIRCUIT BOARD: LAMINATED COPPER CLAD PLASTIC.
2. CONTACTS: 2.54µm[.000100] MIN TIN-LEAD OVER 1.27µm[.000050] MIN NICKEL.
3. LOW VOLTAGE DIFFERENTIAL (LVD) TERMINATION CIRCUIT PER SP1-2 ELECTRICAL INTERFACE STANDARD (REV 09).

OBSOLETE	796073-2
	796073-1
	PART NUMBER

THIS DRAWING IS A CONTROLLED DOCUMENT.

DIMENSIONS: mm [INCHES]

TOLERANCES UNLESS OTHERWISE SPECIFIED:
0 PLC ±-
1 PLC ±-
2 PLC ±0.13 [.005]
3 PLC ±-
4 PLC ±-
ANGLES ±-

MATERIAL 1 FINISH 2

DWN D.HARDY 04 FEB 98
CHK R.STONE 05 FEB 98
APVD J.VANDYKE 05 FEB 98
PRODUCT SPEC —
APPLICATION SPEC —
WEIGHT —

AMP Incorporated
Harrisburg, PA 17105-3608

NAME IDC ASSEMBLY, .025 ℄ TERMINATOR™

SIZE	CAGE CODE	DRAWING NO	RESTRICTED TO
A1	00779	C- 796073	—

CUSTOMER DRAWING SCALE 4:1 SHEET 1 OF 1 REV D