Chipsmall Limited consists of a professional team with an average of over 10 year of expertise in the distribution of electronic components. Based in Hongkong, we have already established firm and mutual-benefit business relationships with customers from,Europe,America and south Asia,supplying obsolete and hard-to-find components to meet their specific needs.

With the principle of “Quality Parts,Customers Priority,Honest Operation,and Considerate Service”,our business mainly focus on the distribution of electronic components. Line cards we deal with include Microchip,ALPS,ROHM,Xilinx,Pulse,ON,Everlight and Freescale. Main products comprise IC,Modules,Potentiometer,IC Socket,Relay,Connector.Our parts cover such applications as commercial,industrial, and automotives areas.

We are looking forward to setting up business relationship with you and hope to provide you with the best service and solution. Let us make a better world for our industry!

Contact us

Tel: +86-755-8981 8866 Fax: +86-755-8427 6832
Email & Skype: info@chipsmall.com Web: www.chipsmall.com
Address: A1208, Overseas Decoration Building, #122 Zhenhua RD., Futian, Shenzhen, China

CnC TECH	Customer (客戶名稱)				
	Prod. Series (系列名稱)	8000-SERIES	Spec. No. (承認書編號)	P1-04	Ver:A2 2006/02/18

Model Number (型號)	Rated (額定)	Insulated Voltage-Proof (耐壓)
8000-9	10~16A/250V	3KV

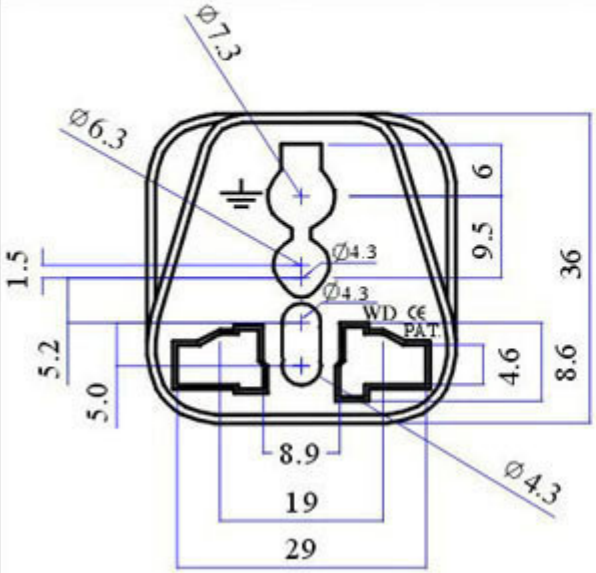

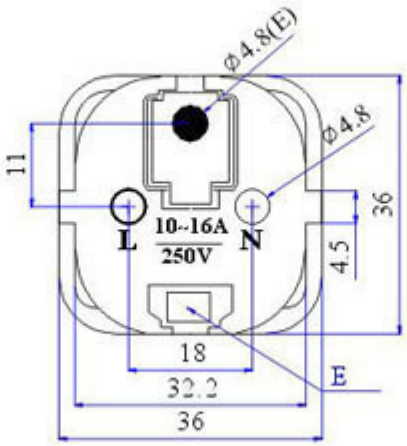

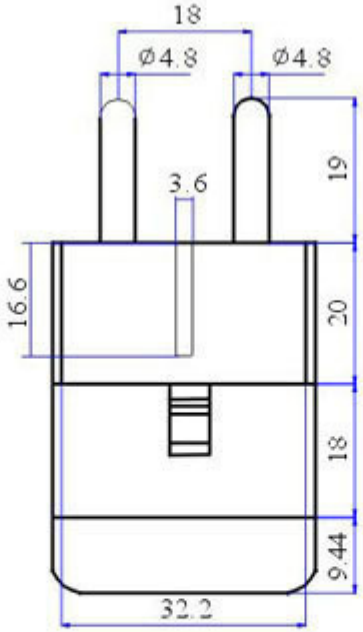

Main Material (主要材質)

NO.	Parts Name (組部名稱)	Material (材 質)	Specification (規 格)	Certification (安規認證)
1.	Shell (外殼)	ABS	PA-777D	UL-94HB
2.	Plug Plate (腳板)	ABS	PA-777D	UL-94HB
3.				
4.				
5.				
6.				

Per Packing Case : (每一包裝外箱:)

Packing Mode (包裝方式)	Q'TY (數量)	N.W. (淨重)	G.W. (毛重)	CUFT (才積)
Box:6pcs/box (盒裝:6個/盒)	300	15.8	16.5	1.5
Blister Card (吊卡裝)	250	15.4	16.5	2.5

Caution : (注意事項)

1. This product is for change of plug pins only , it dose not perform voltage .
2. When use. Please check and ensure your electronics apparatus can work with the local voltage.
3. When do not use , please take off and do not stay the receptacle for safe purpose .

Model number (型號)
8000-9

Description (品名)	Universal Adaptor : 2P With Ground Hole. (萬用轉接器:2P 附側接地型)	Safety Certification	Quality Certification
Suitable for Area (適用國家)	Germany , France , Indonesia , Korea. (Inlay Way) (德國,法國,印尼,韓國,嵌入式)	CE	ISO 9001:2000 T-2000-2 82