Chipsmall Limited consists of a professional team with an average of over 10 year of expertise in the distribution of electronic components. Based in Hongkong, we have already established firm and mutual-benefit business relationships with customers from,Europe,America and south Asia,supplying obsolete and hard-to-find components to meet their specific needs.

With the principle of “Quality Parts,Customers Priority,Honest Operation,and Considerate Service”,our business mainly focus on the distribution of electronic components. Line cards we deal with include Microchip,ALPS,ROHM,Xilinx,Pulse,ON,Everlight and Freescale. Main products comprise IC,Modules,Potentiometer,IC Socket,Relay,Connector.Our parts cover such applications as commercial,industrial, and automotives areas.

We are looking forward to setting up business relationship with you and hope to provide you with the best service and solution. Let us make a better world for our industry!


# Contact us

Tel: +86-755-8981 8866 Fax: +86-755-8427 6832
Email & Skype: info@chipsmall.com Web: www.chipsmall.com
Address: A1208, Overseas Decoration Building, #122 Zhenhua RD., Futian, Shenzhen, China

# Crouzet® Digital Switches

## Index

| | | |
|---|---|---|
| STANDARD<br> 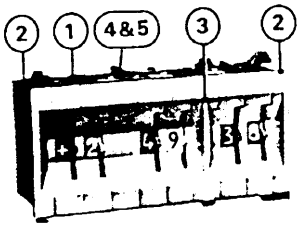 <br>**84 210**<br>Thumbwheel<br>Standard – Panel Mount<br>Page 5 | STANDARD<br> 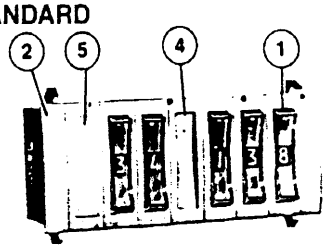 <br>**84 211**<br>Rocker<br>Standard – Panel Mount<br>Page 6 | LARGE<br> 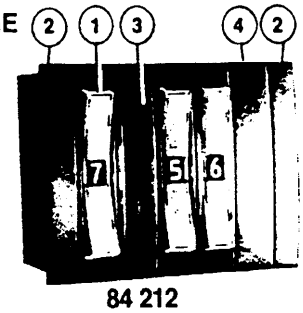 <br>**84 212**<br>Rocker<br>Large – Panel Mount<br>Page 7 |
| STANDARD<br> 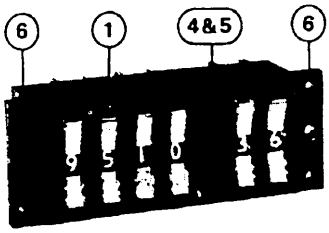 <br>**84 213**<br>Rocker<br>Standard – Rear Mount<br>Page 8 | MINIATURE<br> 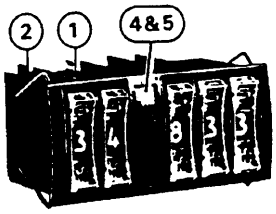 <br>**84 214**<br>Rocker<br>Miniature – Panel Mount<br>Page 9 | MINIATURE<br> 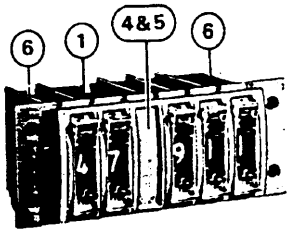 <br>**84 218**<br>Rocker<br>Miniature – Rear Mount<br>Page 10 |
| MINIATURE<br> 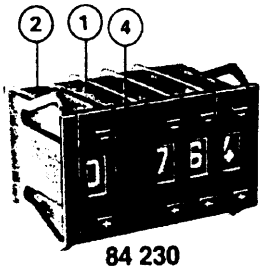 <br>**84 230**<br>Push Button<br>Miniature – Panel Mount<br>Page 12 | SUBMINIATURE<br> 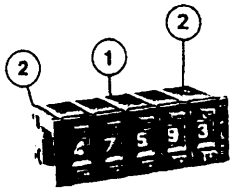 <br>**84 231**<br>Push Button<br>Subminiature – Panel Mount<br>Page 13 | 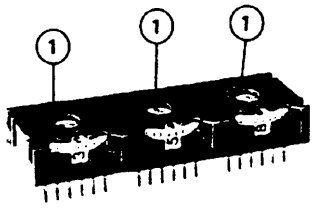 <br>**84 235**<br>Thumbwheel<br>PCB – Flat Mount<br>Page 14 |

1 – **Basic Module:** Enable data input in coded form.

2 – **End Caps:** Snap into place to complete module assembly. Complete with 4 panel clips.

3 – **Separator:** Used to fit 2 switch assemblies into one unit. They come with 2 clips.

4 – **Spacer:** Blank module used to replace a module assembly.

5 – **Encoded "Dummy" Module:** Enables simultaneous switching to two circuits from one digital switch, it is driven by the adjacent module via a coupling shaft.

6 – **End Caps:** For rear mounting of module assembly. They come in pairs.

**Other Index Items** — Page

# Crouzet® Digital Switches

## General Information

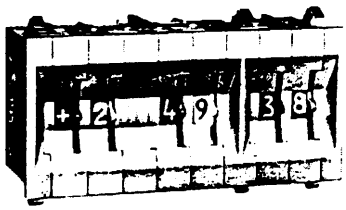

### Wheel Marking

- Large size figures or symbols give maximum readability.
- Complies with European Aeronautics standard BN Aē – NF L 70130.
- Special markings are available on request.

**Assembly** Series: 84210, 84211, 84212, 84213, 84214, 84218

- Modules snap into place – easily disassembled
- No mounting hardware needed

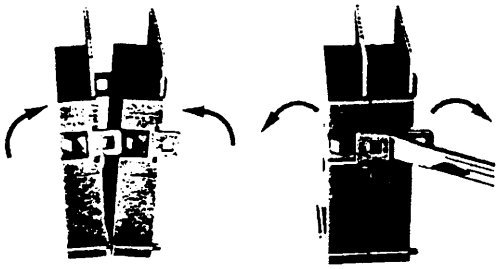

**Assembly** **Dismantling**

**Assembly** Series: 84230, 84231, 84235

- Snap fit – No tools, no hardware

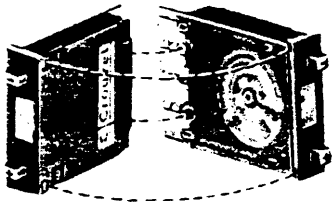

**Clip Mounting** Series 84210, 48211, 84212, 84213, 84214, 84218

- Two clip assembly combination available: Panel thickness – .06 - .14 in. (1.5 - 3.5mm) Panel thickness – .126 - .24 in. (3.2 - 6mm).
- Clips supplied in pairs with end plates or spacers.

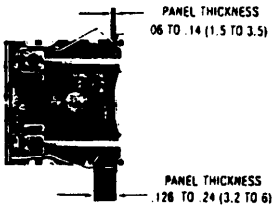


**Dimensions** in inches (mm)

Series 84230, 84231, 84235

- No clip mounting necessary
- Clips molded in end caps

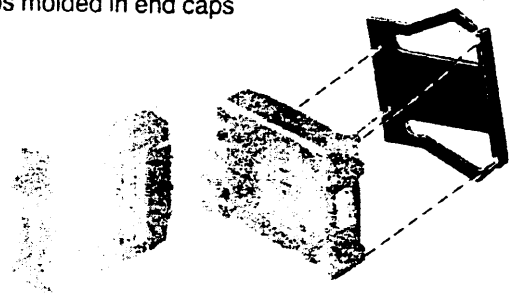

### Colors

- Standard modules come in black (grey upon request).
- Standard wheels are black or red with white markings.
- Optional wheels: (except series 84230, 84231, 84235) Green or blue with white markings. Yellow with black markings

### Dial Stops

- Limit the rotation of the dial to any number of positions, to be specified when ordering.

### Circuit Boards

- All our digital switches are provided with printed circuit boards made of glass-filled P.C. 75 epoxy composite board, .03 in. (.08 mm) thick, covered with copper plated with nickel and gold.
- Two types of circuit boards are available: Short for direct connection or long for component mounting such as resistors or diodes, in series or parallel. (See photos).
- **Note** 84231 – MO1 and MO3: no long circuit board and no hole on circuit available.

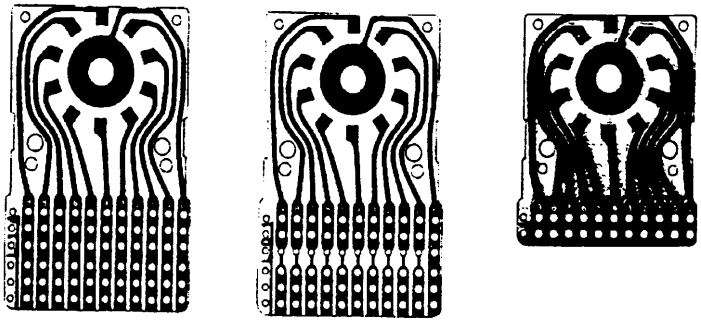

# Switch Terminations and Connectors

## Terminals

- Three types of terminations:
  Direct soldering or plug-in for connectors (S)
  Pins for wire wrapping (X2) – Except Series 84230, 84231, 84235
  Pins for P.C. board soldering (X3).

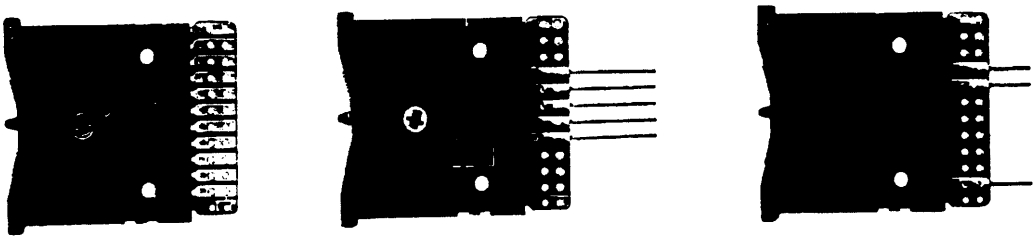

S X2 X3

## Connectors (for Series 84210, 84211, 84212, 84213)

- Connectors available:
  Solder terminals (W2)
  Wire wrap terminals (X2)
  P.C. board solder terminals (X3).

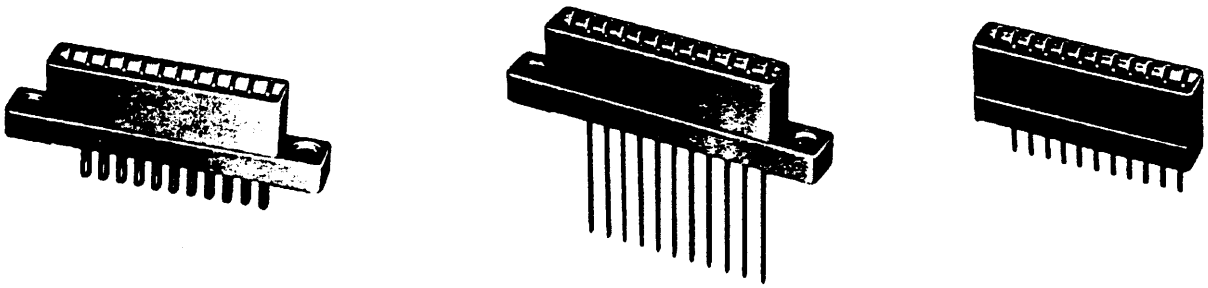

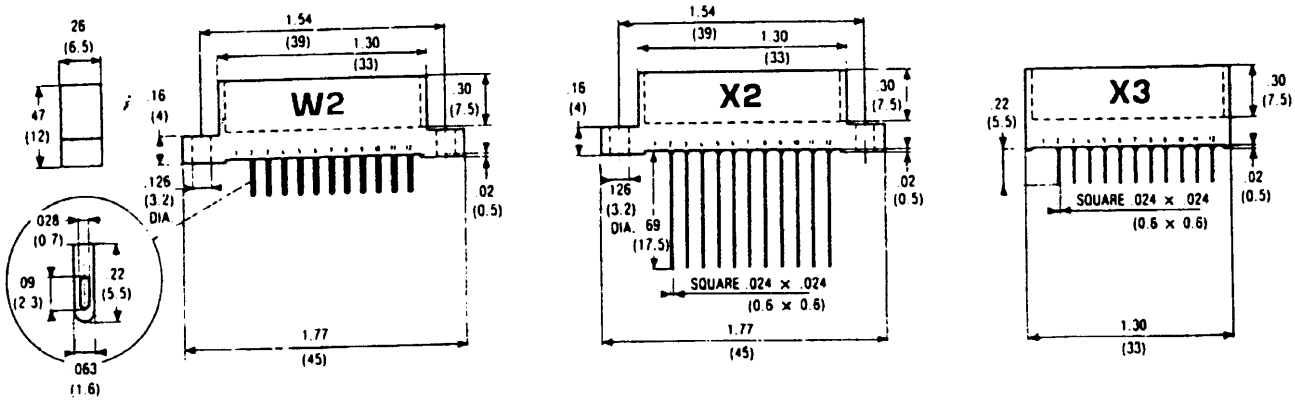


**Dimensions** in inches (mm)

# Crouzet® Digital Switches

## Thumbwheel - standard - panel mount Series 84 210

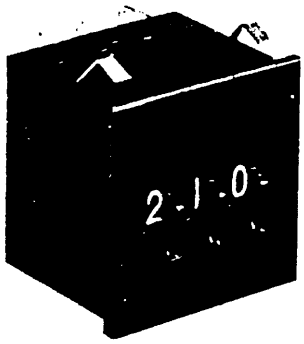

- Large numerals — .18 in. (4.5 mm) high
- All modules easily assembled without hardware
- Black or red wheels standard—other colors on request
- Right-sided circuits — left-sided optional
- Modules will accommodate our L.E.D. readouts

### Mechanical & Electrical Specifications

**Operating Voltage:** .1 to 250 V AC
.1 to 50 V DC
**Nominal Electrical Load (Resistive Load):** .1 mA to 100 mA
**Maximum Non-Switching Load:** 1 A
**Contact Resistance:** 70 mΩ max.
**Life at 50 V DC, .1 A, Resistive Load:** 1 million operations
**Note:** For voltages and currents less than the above values, please consult us.

**Dielectric Strength:** 600 V
**Operating Temperatures:** —13° F. to 158° F. (—25° C. to 70° C.)
**Storage Temperatures:** —40° F. to 185° F. (—40° C. to 85° C.)
**Dial Character Dimensions:** .18 in. x .11 in. (4.5 mm x 2.8 mm)
**Operating Torque:** 10 oz. ( 300 g)

### Materials

**Case:** Noryl
**Wheel:** Delrin
**Contacts and Tracks:** Copper—Nickel—Gold
**Brush:** Beryllium bronze
**Printed Circuit Board:** Glass-filled epoxy (P.C. 75)

**Option:** The P.C. boards of the standard 84 210 type modules are mounted on the right side of the module. The decimal and BCD codes can, optionally, be mounted onto the left side of the module. In this case the outputs are **as shown below.** Please contact us.

**Standard:**

**Option:**

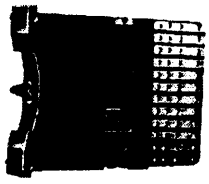

**Decimal M 09**

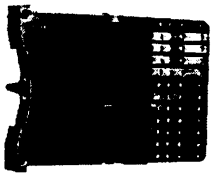

**BCD M10**

**Dimensions** in inches (mm)

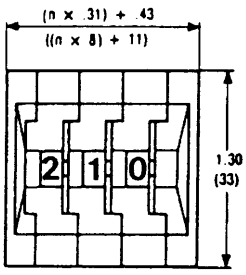


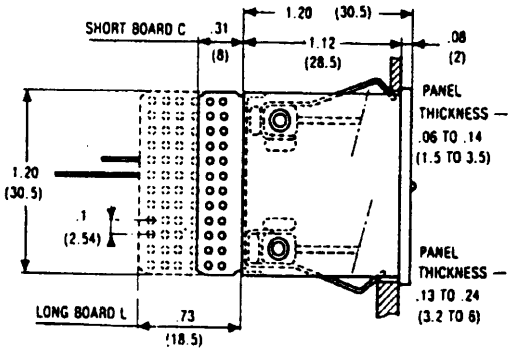


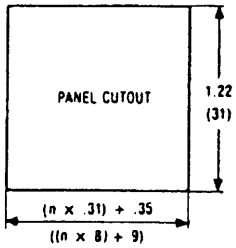


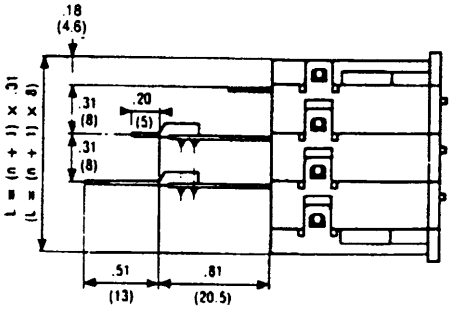

# Crouzet® Digital Switches

## Rocker Switch - standard - panel mount Series 84 211

- Fast switching in both directions
- Large numerals — .18 in. (4.5 mm) high
- All modules easily assembled without hardware
- Good looking—easy to read
- Black or red wheels standard — other colors on request

### Mechanical & Electrical Specifications

**Operating Voltage:** .1 to 250 V AC
.1 to 50 V DC
**Nominal Electrical Load (Resistive Load:** .1 mA to 100 mA
**Maximum Non-Switching Load:** 1 A
**Contact Resistance:** 70 mΩ max.
**Life at 50 V DC, .1 A, Resistive Load:** 1 million operations
**Note:** For voltages and currents less than the above values, please consult us.

**Dielectric Strength:** 600 V
**Operating Temperatures:** —13° F. to 158° F. (—25° C. to 70° C.)
**Storage Temperature:** —40° F. to 185° F. (—40° C. to 85° C.)
**Dial Character Dimensions:** .18 in. x .11 in. (4.5 mm x w.8 mm)
**Operating Force at End of Rocker:** 17 oz. (500 g)

### Materials

**Case:** Noryl
**Wheel:** Delrin
**Rocker Actuator:** Makrolon* (Polycarbonate)
**Contracts and Tracks:** Copper—Nickel—Gold
**Brush:** Beryllium bronze
**Printed Circuit Board:** Glass-filled epoxy (P.C. 75)
*Special elements not used in other manufacturers' products.

### Dimensions in inches (mm)

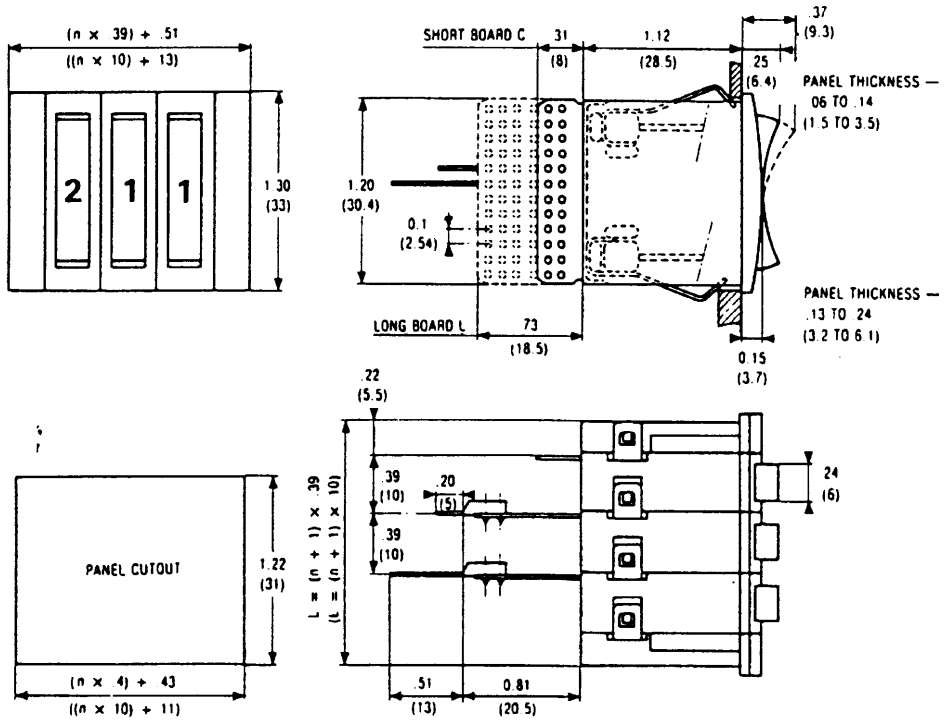

# Crouzet® Digital Switches

## Rocker Switch - large - panel mount Series 84 212

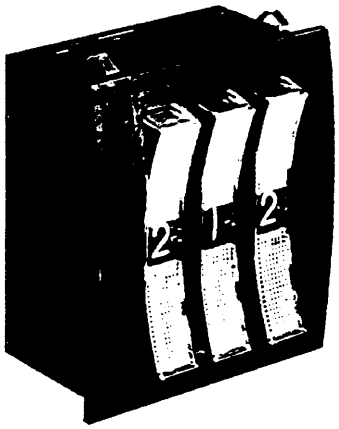

- Fast switching with large rocker actuator
- Extra large numerals — .24 in. (6 mm) high for easy reading
- All modules easily assembled without hardware
- Attractive

### Mechanical & Electrical Specifications

**Operating Voltage:** .1 to 250 V AC
.1 to 50 V DC
**Nominal Electrical Load (Resistive Load):** .1 mA to 100 mA
**Maximum Non-Switching Load:** 1 A
**Contact Resistance:** 70 mΩ max.
**Life at 50 V DC, .1A, Resistive Load:** 1 million operations
**Note:** For voltages and currents less than the above values, please consult us.

**Dielectric Strength:** 600 V
**Operating Temperatures:** —13° F. to 158° F. (—25° C. to 70° C.)
**Storage Temperatures:** —40° F. to 185° F. (—40° C. to 85° C.)
**Dial Character Dimensions:** .24 in. x .15 in. (6 mm x 3.75 mm)
**Operating Force at End of Rocker:** 10 oz. (300 g)

### Materials

**Case:** Noryl
**Wheel:** Delrin
**Rocker Actuator:** Makrolon* (Polycarbonate)
**Contacts and Tracks:** Copper—Nickel—Gold
**Brush:** Beryllium bronze
**Printed Circuit Board:** Glass-filled epoxy (P.C. 75)
*Special elements not used in other manufacturers' products.

### Dimensions in inches (mm)

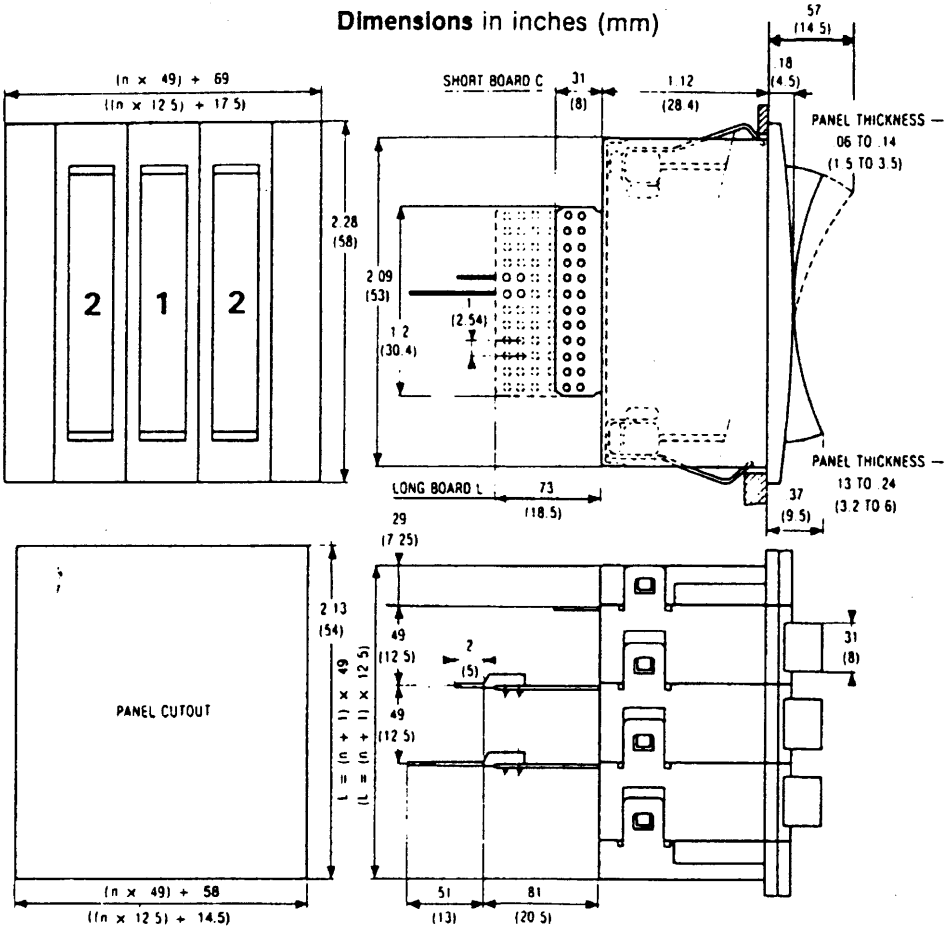

# Crouzet® Digital Switches

## Rocker Switch - standard - rear mount Series 84 213

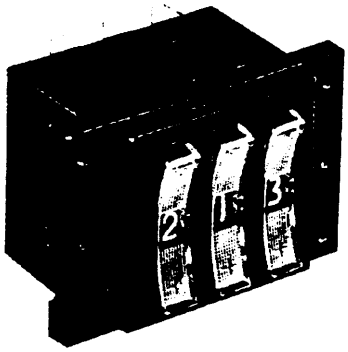

- Fast switching in both directions
- Large numerals — .18 in. (4.5 mm) high
- All modules easily assembled without hardware
- Good looking—easy to read
- Black or red wheels in stock — other colors on request

### Mechanical & Electrical Specifications

**Operating Voltage:** .1 to 250 V AC
.1 to 50 V DC
**Nominal Electrical Load (Resistive Load):** 1 mA to 100 mA
**Maximum Non-Switching Load:** 1 A
**Contact Resistance:** 70 mΩ max.
**Life at 50 V DC, .1 A, Resistive Load:** 1 million operations
**Note:** For voltages and currents less than the above values, please consult us.

**Dielectric Strength:** 600 V
**Operating Temperatures:** —13° F. to 158° F. (—25° C. to 70° C.)
**Storage Temperatures:** —40° F. to 185° F. (—40° C. to 85° C.)
**Dial Character Dimensions:** .18 in. x .11 in. (4.5 mm x 2.8 mm)
**Operating Force at End of Rocker:** 17 oz. (500 g)

### Materials

**Case:** Noryl
**Wheel:** Delrin
**Rocker Actuator:** Makrolon* (Polycarbonate)
**Contacts and Tracks:** Copper—Nickel—Gold
**Brush:** Beryllium bronze
**Printed Circuit Board:** Glass-filled epoxy (P.C. 75)
*Special elements not used in other manufacturers' products.

### Dimensions in inches (mm)

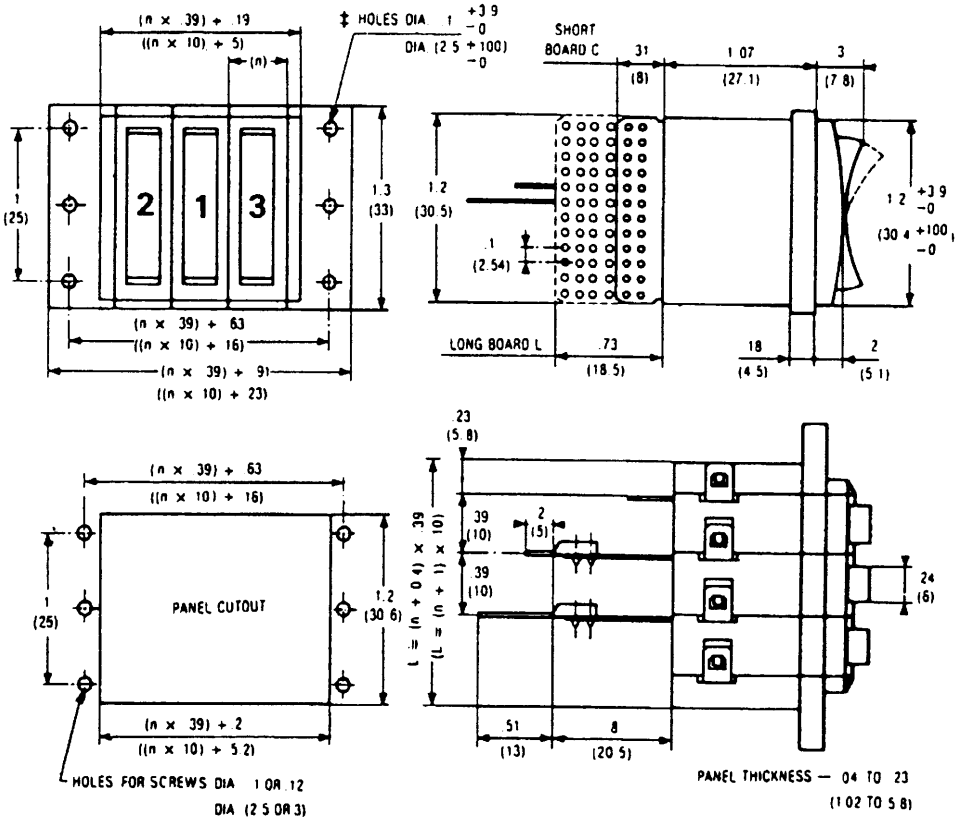


‡**Note:** Mounting by screws and nuts .09 in. (2.5 mm) dia. or self-tapping screws .11 in. (3 mm) dia.

# Rocker Switches

## Rocker Switch - miniature - panel mount Series 84 214

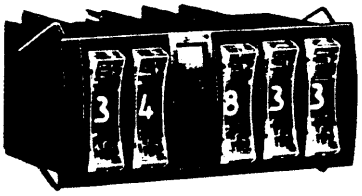

- Fast switching in both directions
- Large numerals — .16 in. (4.0 mm) high
- All modules easily assembled without hardware
- Good looking—easy to read
- Black wheels standard — other colors on request

### Mechanical & Electrical Specifications

**Operating Voltage:** .1 to 250 V AC
.1 to 50 V DC
**Nominal Electrical Load (Resistive Load):** .1 mA to 100 mA
**Maximum Non-Switching Load:** 1 A
**Contact Resistance:** 120 mΩ max.
**Life at 50 V DC, .1A, Resistive Load:** 1 million operations
**Note:** For voltages and currents less than the above values, please consult us.

**Dielectric Strength:** 600 V
**Operating Temperatures:** —13° F to 158° F. (—25° C. to 70° C.)
**Storage Temperatures:** —40° F. to 185° F. (—40° C. to 85° C.)
**Dial Character Dimensions:** .16 in. x .10 in. (4.0 mm x 2.5 mm)
**Operating Force at End of Rocker:** 17 oz. (500 g)

### Materials

**Case:** Noryl
**Wheel:** Delrin
**Rocker Actuator:** Makrolon* (Polycarbonate)
**Contacts and Tracks:** Copper—Nickel—Gold
**Brush:** Beryllium bronze
**Printed Circuit Board:** Glass-filled epoxy (P.C. 75)
*Special elements not used in other manufacturers' products.

### Dimensions in inches (mm)

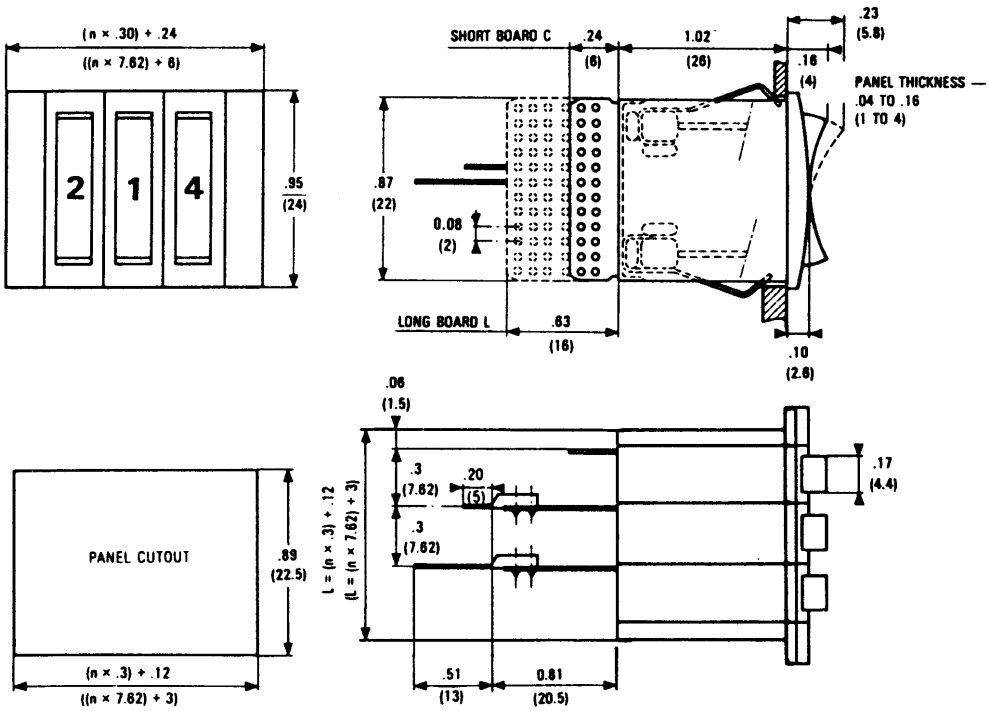

# Rocker Switches

## Rocker Switch - miniature - rear mount  Series **84 218**

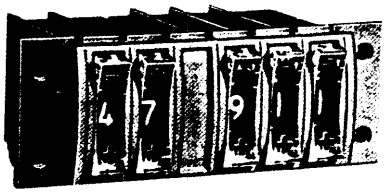

- Fast switching in both directions
- Large numerals — .16 in. (4.0 mm) high
- All modules easily assembled without hardware
- Good looking—easy to read
- Black wheels in stock — other colors on request

### Mechanical & Electrical Specifications

**Operating Voltage:** .1 to 250 V AC
.1 to 50 V DC
**Nominal Electrical Load (Resistive Load):** .1 mA to 100 mA
**Maximum Non-Switching Load:** 1 A
**Contact Resistance:** 120 mΩ max.
**Life at 50 V DC, .1 A, Resistive Load:** 1 million operations
**Note:** For voltages and currents less than the above values, please consult us.

**Dielectric Strength:** 600 V
**Operating Temperatures:** —13° F. to 158° F. (—25° C. to 70° C.)
**Storage Temperatures:** —40° F. to 185° F. (—40° C to 85° C.)
**Dial Character Dimensions:** .16 in. x .10 in. (4.0 mm x 2.5 mm)
**Operating Force at End of Rockers:** 17 oz. (500 g)

### Materials

**Case:** Noryl
**Wheel:** Delrin
**Rocker Actuator:** Makrolon* (Polycarbonate)
**Contacts and Tracks:** Copper—Nickel—Gold
**Brush:** Beryllium bronze
**Printed Circuit Boar:** Glass-filled epoxy (P.C. 75)
*Special elements not used in other manufacturers' products.

### **Dimensions** in inches (mm)

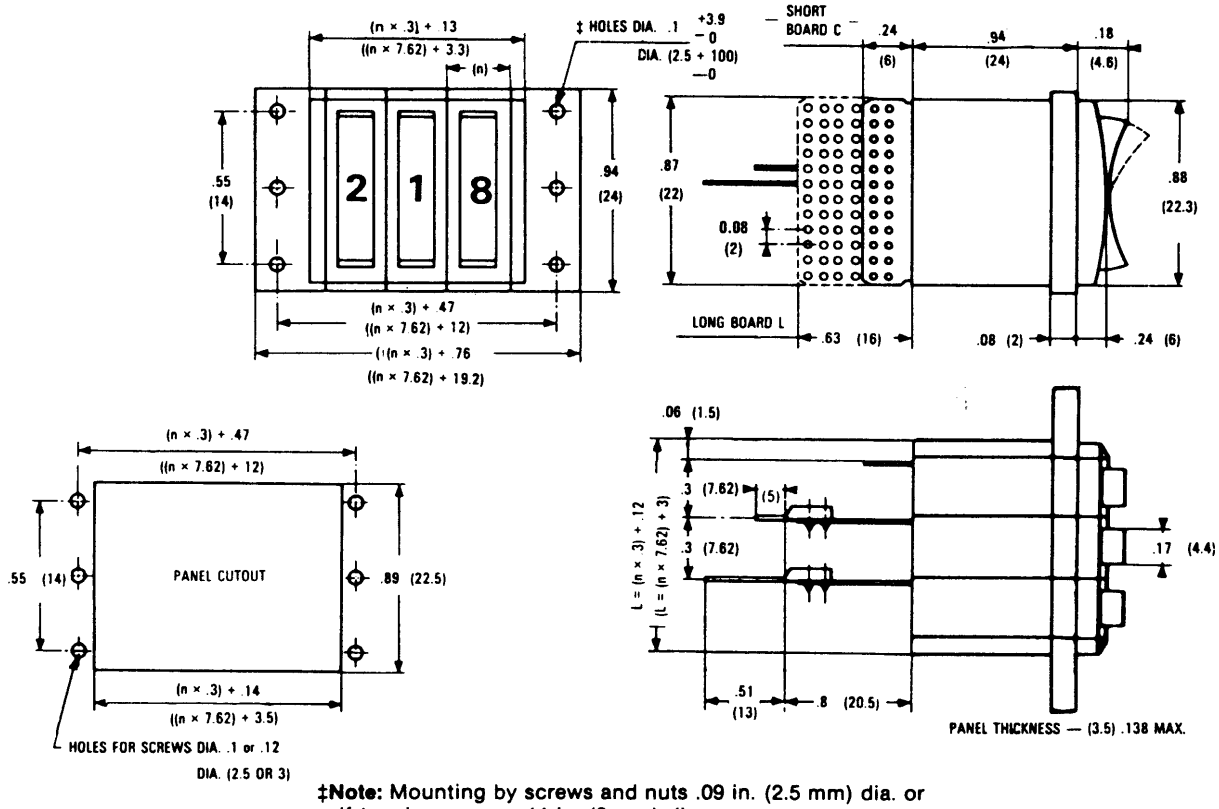


**‡Note:** Mounting by screws and nuts .09 in. (2.5 mm) dia. or self-tapping screws .11 in. (3 mm) dia.

# Crouzet® Digital Switches

## Truth Tables - Series 84 210 - 84 211 - 84 212 - 84 213 - 84 214 - 84 218

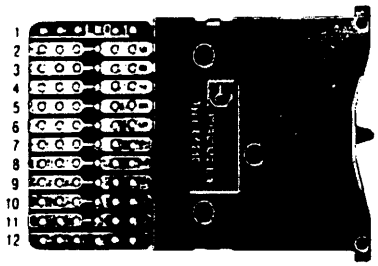


This photograph shows the numbering of each terminal for location purposes only.

The dots indicate the inter-connected tracks for each of the dial settings.

Decimal M01—M13—M14 (see note)

| | | C | 0 | 1 | 2 | 3 | 4 | 5 | 6 | 7 | 8 | 9 |
|---|---|---|---|---|---|---|---|---|---|---|---|---|
| Location on PC Board | | 12 | 11 | 10 | 9 | 8 | 7 | 6 | 5 | 4 | 3 | 2 |
| Dial Setting | 0 | • | • | | | | | | | | | |
| | 1 | • | | • | | | | | | | | |
| | 2 | • | | | • | | | | | | | |
| | 3 | • | | | | • | | | | | | |
| | 4 | • | | | | | • | | | | | |
| | 5 | • | | | | | | • | | | | |
| | 6 | • | | | | | | | • | | | |
| | 7 | • | | | | | | | | • | | |
| | 8 | • | | | | | | | | | • | |
| | 9 | • | | | | | | | | | | • |

B.C.D.—M02

| | | C | 1 | 2 | 4 | 8 |
|---|---|---|---|---|---|---|
| Location on PC Board | | 9 | 8 | 7 | 6 | 5 |
| Dial Setting | 0 | • | | | | |
| | 1 | • | • | | | |
| | 2 | • | | • | | |
| | 3 | • | • | • | | |
| | 4 | • | | | • | |
| | 5 | • | • | | • | |
| | 6 | • | | • | • | |
| | 7 | • | • | • | • | |
| | 8 | • | | | | • |
| | 9 | • | • | | | • |

B.C.D. + Complement—M03

| | | C | 1 | 2 | 4 | 8 | $\bar{1}$ | $\bar{2}$ | $\bar{4}$ | $\bar{8}$ |
|---|---|---|---|---|---|---|---|---|---|---|
| Location on PC Board | | 7 | 6 | 5 | 4 | 3 | 11 | 10 | 9 | 8 |
| Dial Setting | 0 | • | | | | | • | • | • | • |
| | 1 | • | • | | | | | • | • | • |
| | 2 | • | | • | | | • | | • | • |
| | 3 | • | • | • | | | | | • | • |
| | 4 | • | | | • | | • | • | | • |
| | 5 | • | • | | • | | | • | | • |
| | 6 | • | | • | • | | • | | | • |
| | 7 | • | • | • | • | | | | | • |
| | 8 | • | | | | • | • | • | • | |
| | 9 | • | • | | | • | | • | • | |

2 Position Repeating—M04

| Type of Track | | C | 1 | 2 |
|---|---|---|---|---|
| Location on PC Board | | 2 | 9 | 8 |
| Dial Setting (To be specified) | + 5 | • | • | |
| | - 0 | • | | • |
| | + 5 | • | • | • |
| | - 0 | • | | • |
| | + 5 | • | • | |
| | - 0 | • | | • |
| | + 5 | • | • | |
| | - 0 | • | | • |
| | + 5 | • | • | |
| | - 0 | • | | • |

B.C.D. Complement—M07

| Type of Track | C | $\bar{1}$ | $\bar{2}$ | $\bar{4}$ | $\bar{8}$ |
|---|---|---|---|---|---|
| Location on PC Board | 3 | 4 | 11 | 2 | 10 |
| Dial Setting 0 | • | • | • | • | • |
| 1 | • | | • | • | • |
| 2 | • | • | | • | • |
| 3 | • | | | • | • |
| 4 | • | • | • | | • |
| 5 | • | | • | | • |
| 6 | • | • | | | • |
| 7 | • | | | | • |
| 8 | • | • | • | • | |
| 9 | • | | • | • | |

B.C.D. EXCESS 6 + Complement—M08

| Type of Track | C | 1 | 2 | 4 | 8 | $\bar{1}$ | $\bar{2}$ | $\bar{4}$ | $\bar{8}$ |
|---|---|---|---|---|---|---|---|---|---|
| Location on PC Board | 7 | 6 | 5 | 4 | 3 | 11 | 10 | 9 | 8 |
| Dial Setting 0 | • | | • | • | | • | | | • |
| 1 | • | • | • | • | | | | | • |
| 2 | • | | | | • | • | • | • | |
| 3 | • | • | | | • | | • | • | |
| 4 | • | | • | | • | • | | • | |
| 5 | • | • | • | | • | | | • | |
| 6 | • | | | • | • | • | • | | |
| 7 | • | • | | • | • | | • | | |
| 8 | • | | • | • | • | • | | | |
| 9 | • | • | • | • | • | | | | |

Hexadecimal B.C.D. - M 29*

| | | C | 1 | 2 | 4 |
|---|---|---|---|---|---|
| Location on PC Board | | 7 | 11 | 9 | 2 |
| Dial Setting | 0 | • | | | |
| | 1 | • | • | | |
| | 2 | • | | • | |
| | 3 | • | • | • | |
| | 4 | • | | | • |
| | 5 | • | • | | • |
| | 6 | • | | • | • |
| | 7 | • | • | • | • |
| | 8 | • | | | |
| | 9 | • | • | | |
| | 10 | • | | • | |
| | 11 | • | • | • | |
| | 12 | • | | | • |
| | 13 | • | • | | • |
| | 14 | • | | • | • |
| | 15 | • | • | • | • |

*84 210 only

**Note:** In decimal and BCD the following alternatives are available.*

| | Short Board | Long Board for Mounting of Resistors or Diodes | |
|---|---|---|---|
| | | In Series on Each Track (Interrupted Tracks) | In Parallel from Track to Track (Non-Interrupted Tracks) |
| Break Before Make | MO 1-C (Decimal)<br>MO 2-C (BCD) | MO 1-L (Decimal)<br>MO 2-L (BCD) | M 14-L (Decimal)<br>M 15-L (BCD Complement) |
| Make Before Break (on Request) | M 13-C (Decimal) | M 13-L (Decimal) | |

*Please consult us for special codes.

# Crouzet® Digital Switches

## Push Button - miniature - panel mount Series 84 230

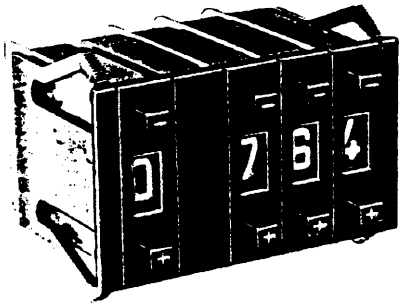

- Long circuit boards have track interruption to allow series mounting of components
- All modules easily assembled without hardware
- Black wheel standard – white wheel with black marking on request
- Fast, smooth switching action

### Mechanical & Electrical Specifications

**Max. operating voltage:**
switched 50 VAC
unswitched 120 VAC
**Rated amperage:** switched 1-50mA
**Max. amperage:** unswitched 500mA
**Min. contact resistance:** .1 ohm
**Min. insulation resistance:** 100,000 megohms
**Dielectric strength:**
between tracks: 500 VAC
between tracks and ground: 2,500 VAC

**Operating temperature:**
+ 15°F to + 160°F (–10°C to + 70°C)
**Storage temperature:**
–40°F to + 185°F (–40°C to + 85°C)
**Mechanical life:**
500,000 operations

### Materials

**Case and wheel:** polycarbonate
**Push Buttons and thumbwheel:** Delrin
**Printed circuit board:** epoxy glass
**Printed contact:** gold deposit
**Contacts:** tin plated

### Panel cutout and front face dimensions
in inches (mm)

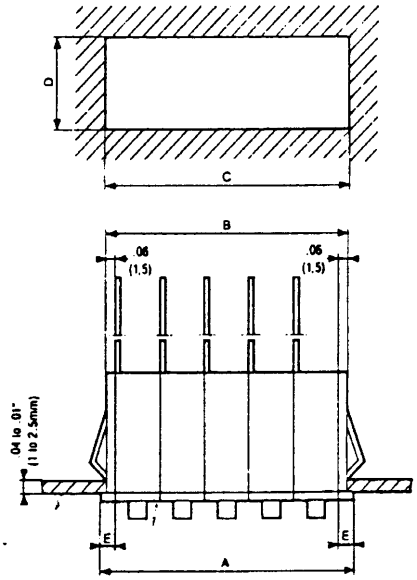


### Dimensions in inches (mm)

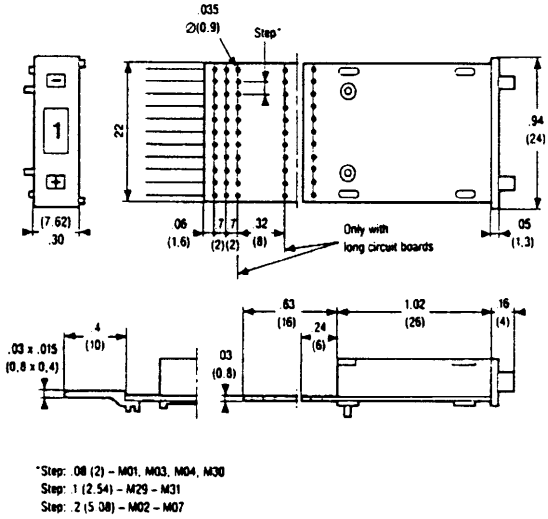


Series **84 230**

| | |
|---|---|
| A (.30 x n) + .24 inches | (7.62 x n) + 6mm |
| B (.30 x n) + .12 inches | (7.62 x n) + 3mm |
| C (.30 x n) + .14 inches | (7.62 x n) + 3.5mm |
| D .89 inches | 22.5mm |
| E .12 inches | 3mm |

# Crouzet® Digital Switches

## Push Button - subminiature - panel mount Series 84 231

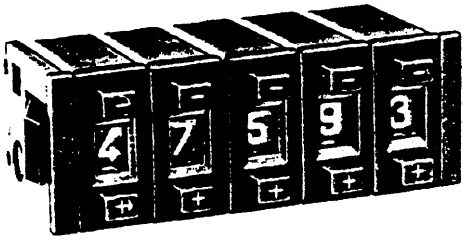

- Subminiature size – only .59 inch high
- All modules easily assembled without hardware
- Black wheel standard – white wheel with black markings on request
- Fast, smooth switching action

### Mechanical & Electrical Specifications

**Max. operating voltage:**
switched 50 VAC
unswitched 120 VAC
**Rated amperage:** switched 1-50mA
**Max. amperage:** unswitched 500mA
**Min. contact resistance:** .1 ohm
**Min. insulation resistance:** 1,000 megohms
**Dielectric strength:**
between tracks: 500 VAC
between tracks and ground: 2,500 VAC

**Operating temperature:**
+15°F to +160°F (–10°C to +70°C)
**Storage temperature:**
–40°F to +185°F (–40°C to +85°C)
**Mechanical life:**
500,000 operations

### Materials

**Case and wheel:** polycarbonate
**Push Buttons and thumbwheel:** Delrin
**Printed circuit board:** epoxy glass
**Printed contact:** gold deposit
**Contacts:** tin plated

### Panel cutout and front face dimensions
in inches (mm)

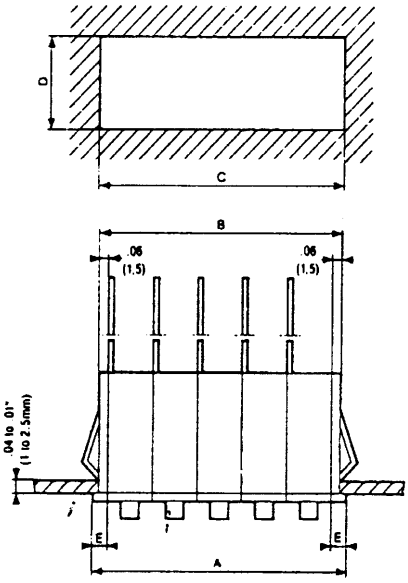


### Dimensions in inches (mm)

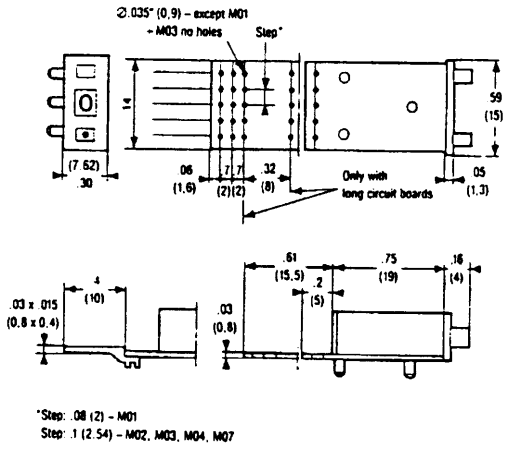


Series **84 231**

| | |
|---|---|
| A (.30 x n) + .20 inches | (7.62 x n) + 5.08mm |
| B (.30 x n) + .12 inches | (7.62 x n) + 3mm |
| C (.30 x n) + .14 inches | (7.62 x n) + 3.5mm |
| D .57 inches | 14.5mm |
| E .10 inches | 2.54mm |

# Crouzet® Digital Switches

## Thumbwheel - flat PCB mount Series 84 235

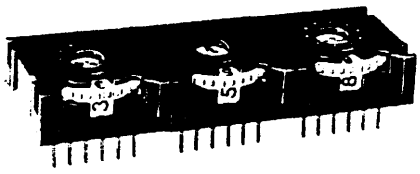

- Low profile – specially designed for PCB mounting
- All modules easily assembled without hardware
- Black or red wheels standard – white wheel with black marking on request
- Fast, smooth switching action

### Mechanical & Electrical Specifications

**Max. operating voltage:**
36 VDC/150 VAC
**Rated amperage:** switched 1-100mA
**Max. amperage:** unswitched 500mA
**Min. contact resistance:** .1 ohm
**Min. insulation resistance:** 1,000 megohms
**Dielectric strength:**
between tracks: 500 VAC
between tracks and ground: 2,500 VAC

**Operating temperature:**
+ 15°F to + 160°F (–10°C to + 70°C)
**Storage temperature:**
–40°F to + 185°F (–40°C to + 85°C)
**Mechanical life:**
250,000 operations

### Materials

**Case and wheel:** polycarbonate
**Thumbwheel:** Delrin
**Printed circuit board:** epoxy glass
**Printed contact:** gold deposit
**Contacts:** tin plated

### Dimensions in inches (mm)

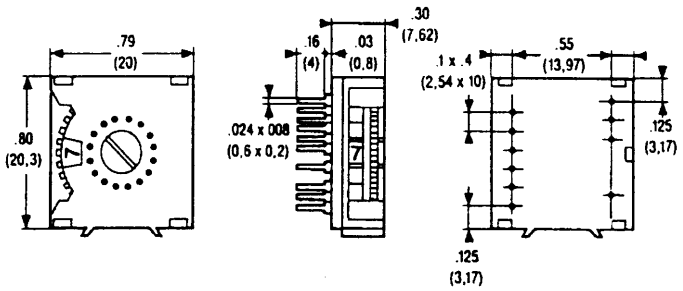

# Crouzet® Digital Switches

## Truth Tables - Series 84 230, 84 231, and 84 235

The dots indicate the inter-connected tracks for each of the dial settings.

B.C.D.

| | | M02 | | | | |
|---|---|---|---|---|---|---|
| | | C | 1 | 2 | 4 | 8 |
| Location on PC Board | 84 230 | 10 | 2 | 4 | 6 | 8 |
| | 84 231 | 5 | 1 | 2 | 3 | 4 |
| | 84 235 | 7<br>6<br>2 | 12 | 10 | 8 | 4 |
| Dial Setting | 0 | ● | | | | |
| | 1 | ● | ● | | | |
| | 2 | ● | | ● | | |
| | 3 | ● | ● | ● | | |
| | 4 | ● | | | ● | |
| | 5 | ● | ● | | ● | |
| | 6 | ● | | ● | ● | |
| | 7 | ● | ● | ● | ● | |
| | 8 | ● | | | | ● |
| | 9 | ● | ● | | | ● |

B.C.D. + Complement

| M03 | | | | | | | | |
|---|---|---|---|---|---|---|---|---|
| C | 1 | 2 | 4 | 8 | 1 | 2 | 4 | 8 |
| 10 | 2 | 4 | 6 | 8 | 3 | 5 | 7 | 9 |
| 5 | 10 | 9 | 8 | 7 | 1 | 2 | 3 | 4 |
| 2<br>6<br>10 | 8 | 12 | 11 | 3 | 5 | 1 | 9 | 4 |
| ● | | | | | ● | ● | ● | ● |
| ● | ● | | | | | ● | ● | ● |
| ● | | ● | | | ● | | ● | ● |
| ● | ● | ● | | | | | ● | ● |
| ● | | | ● | | ● | ● | | ● |
| ● | ● | | ● | | | ● | | ● |
| ● | | ● | ● | | ● | | | ● |
| ● | ● | ● | ● | | | | | ● |
| ● | | | | ● | ● | ● | ● | |
| ● | ● | | | ● | | ● | ● | |
| ● | | ● | | ● | ● | | ● | |
| ● | ● | ● | | ● | | | ● | |
| ● | | ● | ● | ● | ● | | | |
| ● | ● | | ● | ● | | ● | | |
| ● | | ● | ● | ● | ● | | | |
| ● | ● | ● | ● | ● | | | | |

B.C.D. Complement

| M07 | | | | |
|---|---|---|---|---|
| C | 1 | 2 | 4 | 8 |
| 4 | 2 | 6 | 8 | 10 |
| 5 | 1 | 2 | 3 | 4 |
| 8<br>7<br>6 | 12 | 10 | 4 | 2 |
| ● | ● | ● | ● | ● |
| ● | | ● | ● | ● |
| ● | ● | | ● | ● |
| ● | | | ● | ● |
| ● | ● | ● | | ● |
| ● | | ● | | ● |
| ● | ● | | | ● |
| ● | | | | ● |
| ● | ● | ● | ● | |
| ● | | ● | ● | |

2 Position Repeating

| | | M04 | | |
|---|---|---|---|---|
| | | C | 1 | 2 |
| Location on PC Board | 84 230 | 1 | 2 | 11 |
| | 84 231 | 2 | 3 | 4 |
| | 84 235 | 7<br>6 | 4 | 8 |
| Dial Settings (To be specified) | + 5 | ● | ● | |
| | − 0 | ● | | ● |
| | + 5 | ● | ● | |
| | − 0 | ● | | ● |
| | + 5 | ● | ● | |
| | − 0 | ● | | ● |
| | + 5 | ● | ● | |
| | − 0 | ● | | ● |

Hexadedimal B.C.D.

| | | M29 | | | | |
|---|---|---|---|---|---|---|
| | | C | 1 | 2 | 4 | 8 |
| Location on PC Board | 84 230 | 5 | 4 | 7 | 6 | 8 |
| | 84 235 | 8<br>7 | 12 | 2 | 10 | 4 |
| Dial Setting | 0 | ● | | | | |
| | 1 | ● | ● | | | |
| | 2 | ● | | ● | | |
| | 3 | ● | ● | ● | | |
| | 4 | ● | | | ● | |
| | 5 | ● | ● | | ● | |
| | 6 | ● | | ● | ● | |
| | 7 | ● | ● | ● | ● | |
| | 8 | ● | | | | ● |
| | 9 | ● | ● | | | ● |
| | A | ● | | ● | | ● |
| | B | ● | ● | ● | | ● |
| | C | ● | | | ● | ● |
| | D | ● | ● | | ● | ● |
| | E | ● | | ● | ● | ● |
| | F | ● | ● | ● | ● | ● |

Hexadecimal B.C.D. + Complement

| M30 | | | | | | | | |
|---|---|---|---|---|---|---|---|---|
| C | 1 | 2 | 4 | 8 | 1 | 2 | 4 | 8 |
| 10 | 3 | 5 | 9 | 7 | 4 | 2 | 8 | 6 |
| 4<br>6 | 10 | 11 | 12 | 8 | 3 | 2 | 1 | 5 |
| ● | | | | | ● | ● | ● | ● |
| ● | ● | | | | | ● | ● | ● |
| ● | | ● | | | ● | | ● | ● |
| ● | ● | ● | | | | | ● | ● |
| ● | | | ● | | ● | ● | | ● |
| ● | ● | | ● | | | ● | | ● |
| ● | | ● | ● | | ● | | | ● |
| ● | ● | ● | ● | | | | | ● |
| ● | | | | ● | ● | ● | ● | |
| ● | ● | | | ● | | ● | ● | |
| ● | | ● | | ● | ● | | ● | |
| ● | ● | ● | | ● | | | ● | |
| ● | | ● | ● | ● | ● | | | |
| ● | ● | | ● | ● | | ● | | |
| ● | | ● | ● | ● | ● | | | |
| ● | ● | ● | ● | ● | | | | |

Hexadecimal B.C.D. Complement Only

| M31 | | | | |
|---|---|---|---|---|
| C | 1 | 2 | 4 | 8 |
| 8 | 4 | 6 | 7 | 5 |
| 8<br>7 | 12 | 2 | 10 | 4 |
| ● | ● | ● | ● | ● |
| ● | | ● | ● | ● |
| ● | | ● | ● | ● |
| ● | | | ● | ● |
| ● | ● | ● | | ● |
| ● | | ● | | ● |
| ● | ● | | | ● |
| ● | | | | ● |
| ● | ● | ● | ● | |
| ● | | ● | ● | |
| ● | ● | | ● | |
| ● | | | ● | |
| ● | ● | ● | | |
| ● | ● | ● | | |
| ● | ● | | | |
| ● | | | | |

Decimal

| | | M01 | | | | | | | | | |
|---|---|---|---|---|---|---|---|---|---|---|---|
| | | C | 0 | 1 | 2 | 3 | 4 | 5 | 6 | 7 | 8 | 9 |
| Location on PC Board | 84 230 | 1 | 11 | 2 | 3 | 4 | 5 | 6 | 7 | 8 | 9 | 10 |
| | 84 231 | 9 | 6 | 1 | 11 | 2 | 10 | 3 | 8 | 4 | 7 | 5 |
| | 84 235 | 7<br>6 | 5 | 12 | 11 | 10 | 9 | 8 | 1 | 2 | 3 | 4 |
| | 0 | ● | ● | | | | | | | | | |
| | 1 | ● | | ● | | | | | | | | |
| | 2 | ● | | | ● | | | | | | | |
| | 3 | ● | | | | ● | | | | | | |
| | 4 | ● | | | | | ● | | | | | |
| | 5 | ● | | | | | | ● | | | | |
| | 6 | ● | | | | | | | ● | | | |
| | 7 | ● | | | | | | | | ● | | |
| | 8 | ● | | | | | | | | | ● | |
| | 9 | ● | | | | | | | | | | ● |

### Terminal Configuration

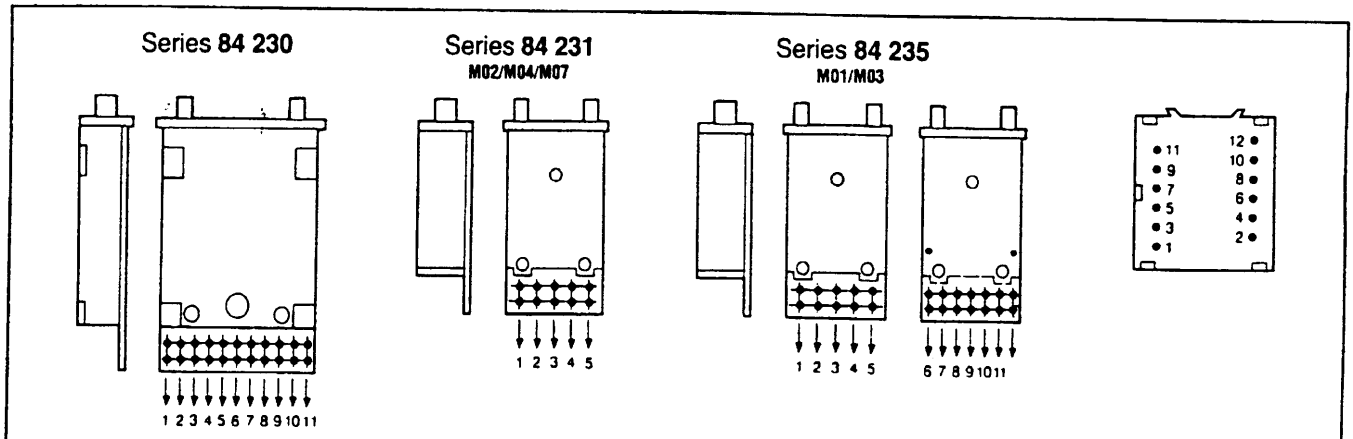


The above diagrams show the numbering of each terminal for location purposes only.

Please consult us for special codes.

# Crouzet® Digital Switches

## How to Order

**Example of order:** Thumbwheel | 84 210 | M02 | L | N | R | S | 4 – 6

**1 – Description**
- Rocker
- Thumbwheel ✓
- Push Button

**2 – Series**

✓ 84 210 84 213 84 230
84 211 84 214 84 231
84 212 84 218 84 235

**3 – Code Definition**
- Decimal ..... M 01
- Binary BCD 1-2-4-8 ..... M 02 ✓
- Binary BCD 1-2-4-8 + complement ..... M 03
- 2 position repeating (+/−) or (0/5) ..... M 04
- BCD complement ..... M 07
- BCD excess 6 + complement ..... M 08
- Hexadecimal BCD* ..... M 29
- Hexadecimal BCD + complement** ..... M 30
- Hexadecimal BCD complement** ..... M 31

*84 210, 84 230, 84 235 only
**84 230 and 84 235 only

**4 – Circuit Board**
- Short (standard): C
- Long: ✓ ..... L✓

**5 – Case Color**
- Black: (standard) .... N✓
- Grey: (optional) ..... G

**6 – Wheel Color**
- Black: (standard) .... N
- Red: (standard) ..... R✓
- Yellow: (optional) .... J
- Green: (optional) .... V
- Blue: (optional) ..... R

**7 – Terminations**
- Standard: Solder terminals ✓ ..... S ✓
- Other: For wire wrap ..... X2
  - Pins for PC board soldering ..... X3
  - Connector (see accessories) ..... S

**8 – Mechanical stops (to be specified only when a limited setting range is required**
- Indicate the 1st and last positions
  - e.g. possible positions: 4-5-6 ✓
  - blocked positions: 7-8-9-0-1-2-3

**Above example to be read as:**
1 – Thumbwheel switch
2 – 84 210
3 – binary BCD 1-2-4-8 – M 02
4 – Long circuit board
5 – Black case
6 – Red wheel
7 – Standard solder terminals
8 – Possible positions 4-5-6

**ACCESSORIES (see page 2)**
**(specify digital switch series number)**
- **Pair of End Caps including Clips.** JE/ (color: N – black: standard G – grey: optional)
- **Spacer:** MI
- **Encoded "Dummy" Module:** MC – also specify code, circuit board, color connections
- **Separator including Clips:** MS
- **Connector for Plugging of Circuit C:**
  CR/W2-Solder Terminals
  CR/X2-Wire Wrapping Terminals
  CR/X3-PC Board Pins

# Crouzet® Digital Switches

## L.E.D. Readouts - 3 main families

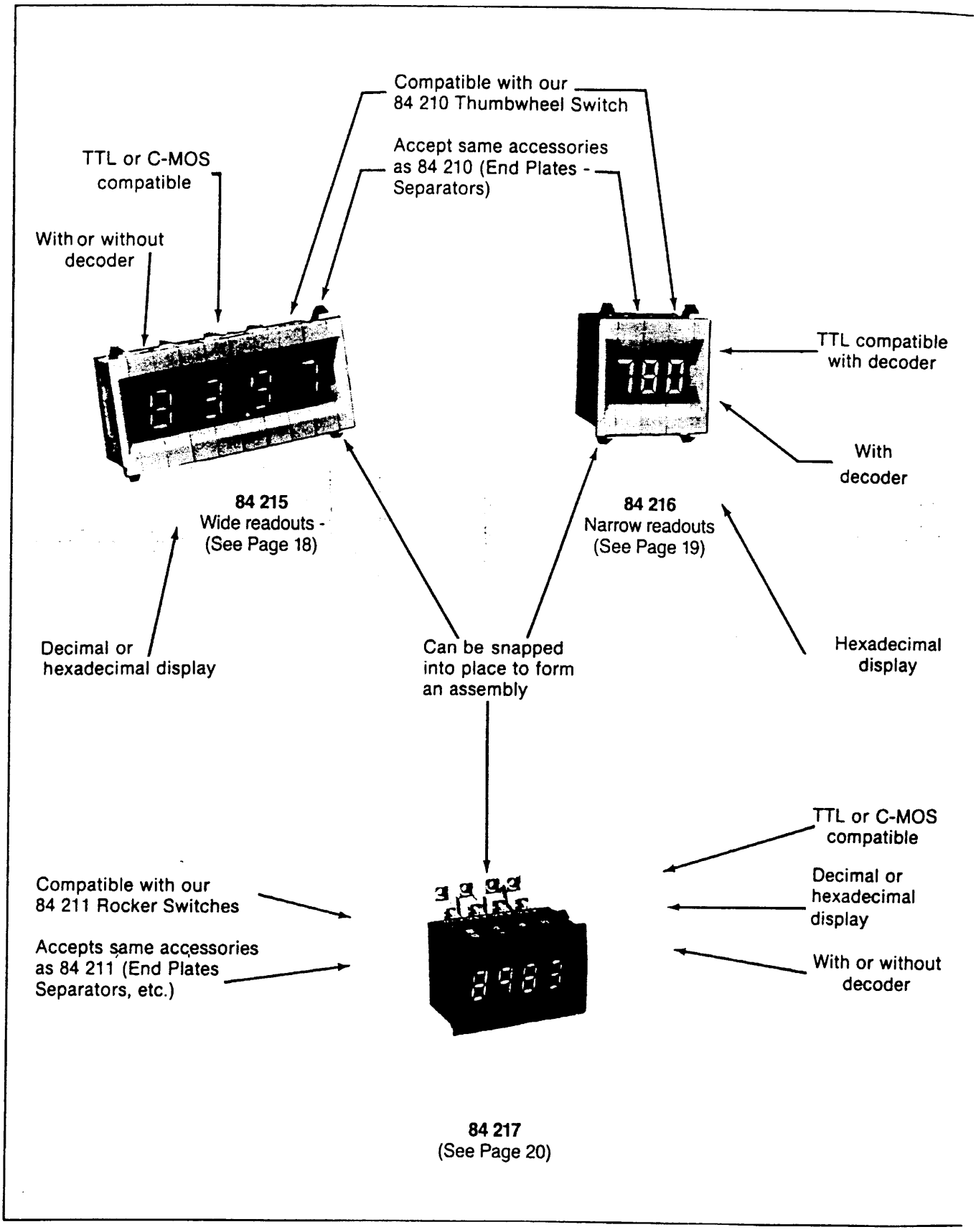

# Crouzet® Digital Switches

## L.E.D. Readouts - wide readout - panel mount Series 84 215

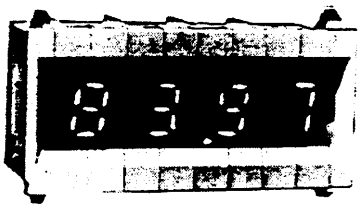

- The L.E.D. readout modules type 84 215 can work alongside our Thumbwheel switches, 84 210 Series.
- The same accessories (end plates, separators, etc.) can be used. This allows the assembly of counting and programming systems, offering a consistent design in a small size.
- As with our Thumbwheel switches, these modules can be snapped into place to form an assembly.
- Choice of decoders (TTL or C-MOS), memory, voltages.
- Three versions are available.

### Common Specifications

**Figure Height:** .433 in. (11 mm)
**Module Width:** .62 in. (16 mm)
**Color:** Red
**Operating Temperature:** +32° F to +140° F. (0° C. to 60° C.)
**Case Color:** Black (standard) or grey (upon request)

**Current Per Segment:** 7 mA
**Display:** H.P. 5082 - 7653
**RBI - RBO** output on all modules (except A1)
**Common Cathode**

### Particular Specifications

| Code | BCD Decoder C-MOS | BCD Decoder TTL | LT Output (Lamp Test) | EL Output (Memory) | Position of Decimal Point Left | Position of Decimal Point Right | Typical Consumption of Decoder at 75° F (25° C) | Voltages Available | Type of Display |
|---|---|---|---|---|---|---|---|---|---|
| A1 | No | No | Yes | No | | • | N.A. | 5 V (standard)<br>12-15-24 V (on request) | According to User's decoder |
| A3 | MM74 C48 | No | Yes | No | | • | 0.05 µA | 5 V (standard)<br>12-15 V (on request) | Decimal |
| A6 | No | 9368 | No | Yes | | • | 45 mA | 5 V | Hexadecimal |

### Terminations

MODULES WITH DECODER A3 and A6

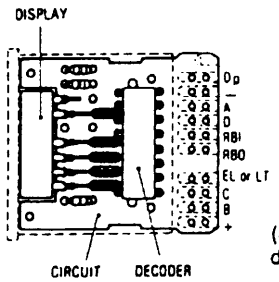


ACCORDING TO THE DECODER

(See wiring diagram)

MODULES WITHOUT DECODER A1

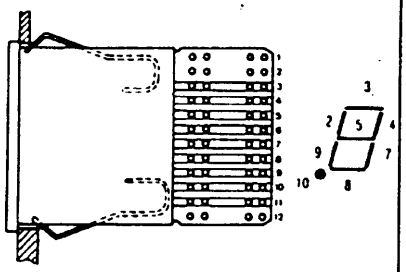

LONG BOARDS L = .73 (18.5)
SHORT BOARDS L = .33 (8.5)

TERMINAL 5 — COMMON

Wiring Diagram: See Page 17

### Dimensions in inches (mm)

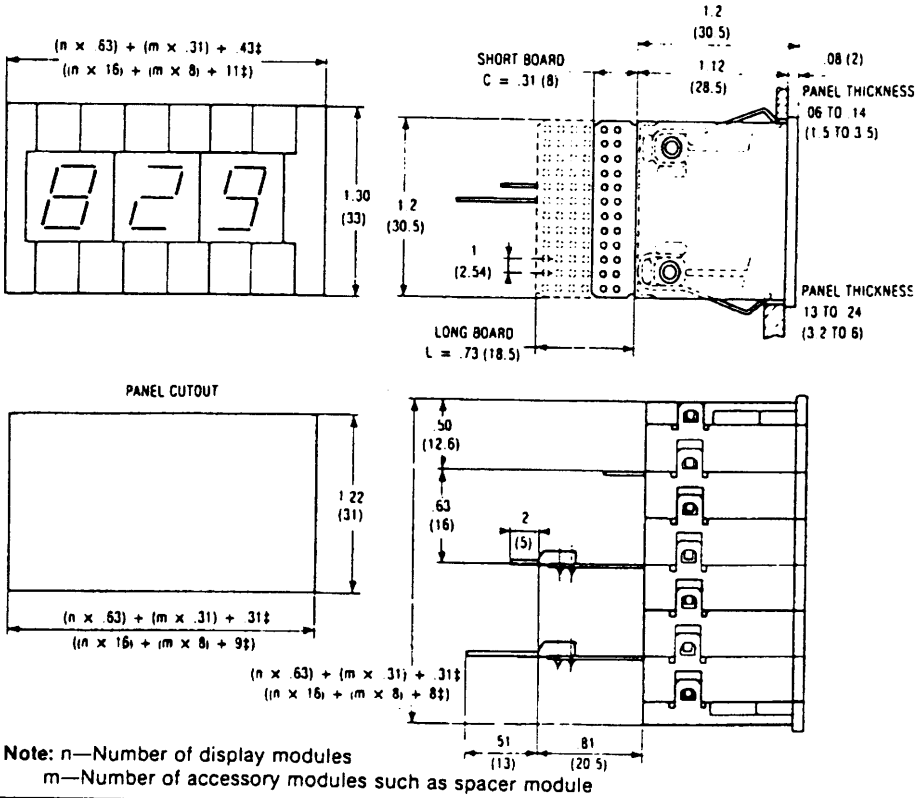


**Note:** n—Number of display modules
m—Number of accessory modules such as spacer module

# L.E.D. Readout Modules

## L.E.D. Readouts - narrow readout - panel mount Series **84 216**

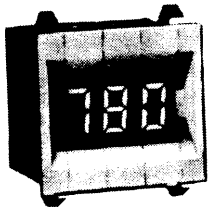

**With Memory**

- The L.E.D. readout modules type 84 216 can be mounted together with the 84 215 L.E.D and/or 84 210 Thumbwheel.
- Therefore, the same accessories (end plates and separators) are used.
- The thickness of these modules is .31 in. (8 mm)
- The clip mounting offers a consistent design in a small size.
- Snap on assembly requires no hardware.
- Our modules are equipped with a decoder BCD compatible with TTL technology.

### Specifications

**Voltage:** 5 V
**Current:** 16 to 22 mA per segment
**Decoding:** BCD with TTL technology (decoder 9368)
**Display:** 7 segment L.E.D. (Fairchild)
**Figure Height:** .35 in. (9 mm)
**Module Width:** .31 in. (8 mm)
**Color:** Red
**Case Color:** Black (standard) or grey (upon request)
**Operating Temperature:** +32° F. to +95° F. (0° C to +35° C.)

**EL (Enable Latch)** output
**RBI - RBO** outputs
**Decoder Consumption** at 75° F. (25° C) = 45 mA
**Common Cathode**
**Hexadecimal Display**
**Position of Decimal Point:** right

### Terminations

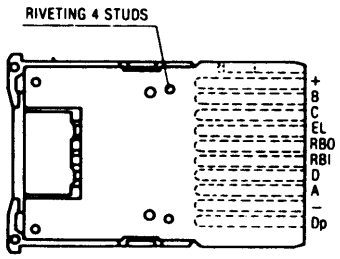


Wiring Diagram
See Page 21

### Dimensions in inches (mm)

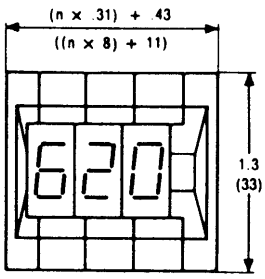


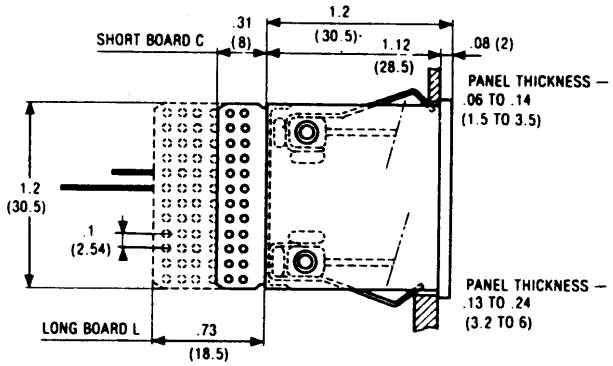


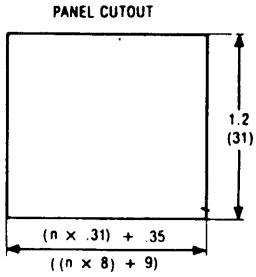


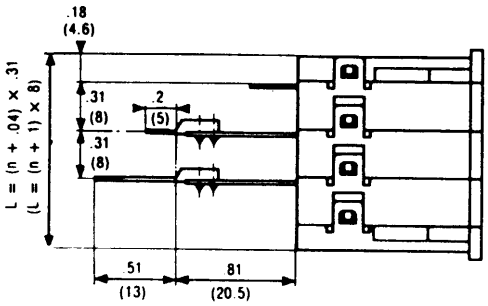

# L.E.D. Readout Modules

## L.E.D. Readouts - panel mount Series **84 217** - compatible with Rocker Switches

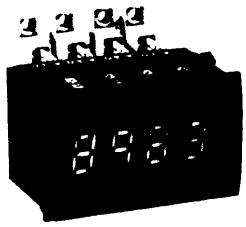

- The L.E.D. readout modules type 84 217 can be mounted together with our 84 211 Rocker switches.
- The same accessories (end plates, separators, etc.) can be used.
- As with our Rocker switches, these modules can be snapped into place to form an assembly.
- Choice of decoders, (TTL or C-MOS), memory (EL), voltages etc.
- Six versions are available.

### Common Specifications

**Figure Height:** .39 in (10 mm)
**Module Width:** .39 in (10 mm)
**Color:** Orange
**Operating Temperature:** +32° F to +140° F. (0° C. to 60° C.)
**Case Color:** Black (standard) or grey (upon request)
**Current Per Segment:** 7 mA
**Display:** MAN 4640 (except 84 217-A11: MAN 4605)
**Common Cathode**
**Position of Decimal Point:** right

### Particular Specifications

| Code | BCD Decoder C-MOS | BCD Decoder TTL | LT Output (Lamp Test) | EL Output (Memory) | RBI-RBO Outputs | Typical Consumption of Decoder at 75° F. (25° C.) | Voltages Available | Type of Display |
|---|---|---|---|---|---|---|---|---|
| A1 | No Decoder | No Decoder | No | No | No | Not Applicable | 5 V (standard) 12-15-24 V (on request) | Depends upon User's Decoder |
| A3 | MM 74C48 | | Yes | No | Yes | 0.05 μA | 5 V (standard) 12-15 V (on request) | Decimal |
| A6 | | 9368 | No | Yes | Yes | 45 mA | 5 V | Decimal |
| A8 | MC 14511 | | Yes | Yes | No | 0.015 μ A | 5 V (standard) 12-15-24 V (on request) | Decimal |
| A10 | MC 14495 | | No | Yes | No | 0.05 μ.A | 5 V (standard) 12-15-24 V (on request) | Hexadecimal |
| A11 | MC 14511 | | Yes | Yes | No | 0.015 μ A | 5 V (standard) 12-15-24 V (on request) | ± 1 |

### Terminations

MODULES WITHOUT DECODER A1

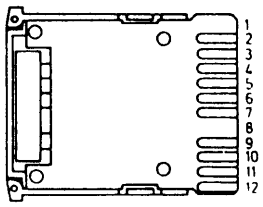


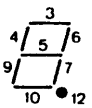


Common: Terminal 11

MODULES WITH DECODER (A2 to A8 and A11)

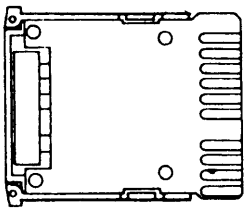


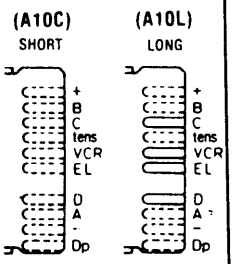


Wiring Diagram: See Page 21

ACCORDING TO THE DECODER (SEE WIRING DIAGRAM)

### Dimensions in inches (mm)

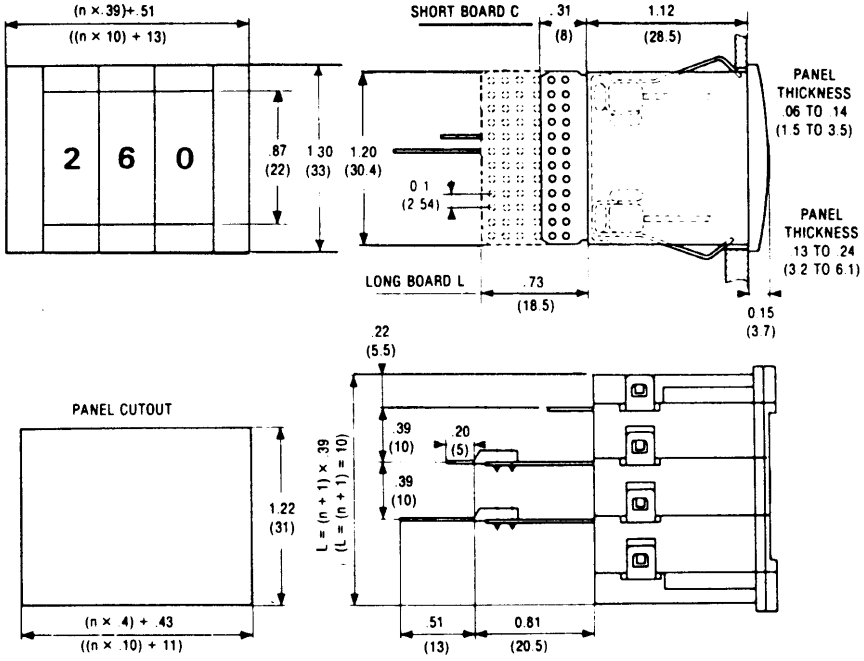

# L.E.D. Readouts - Wiring Diagrams

## 84 215 - A3

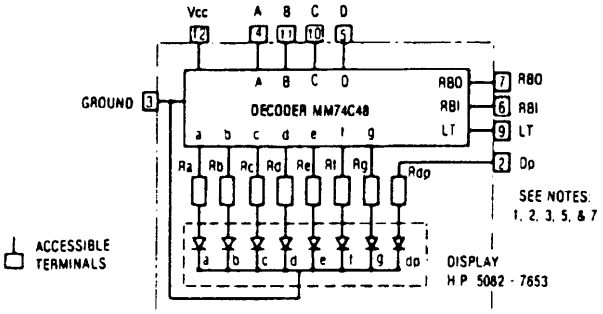


## 84 215 - A6

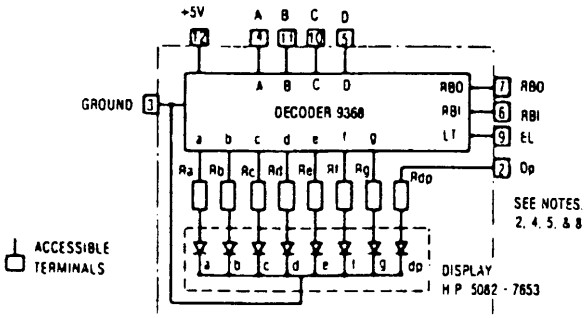


## 84 216

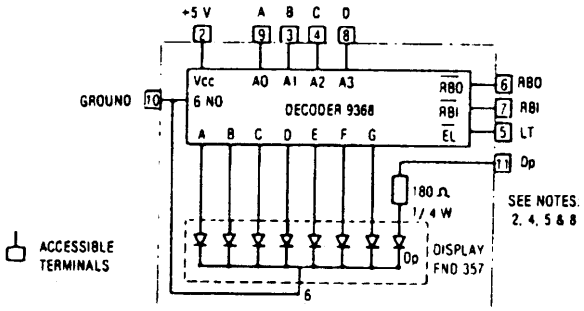


## 84 217 - A3

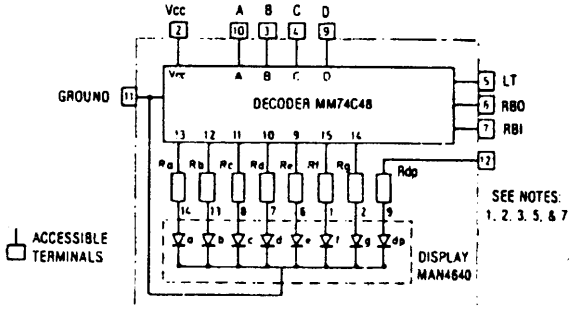


## 84 217 - A6

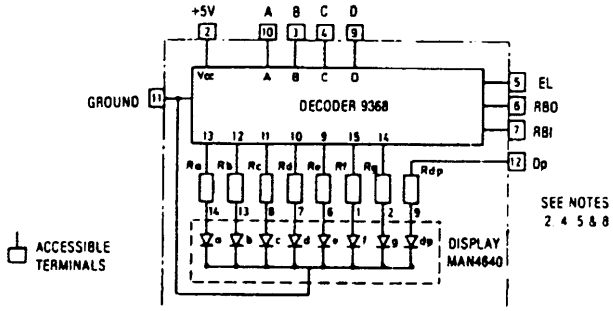


## 84 217 - A8

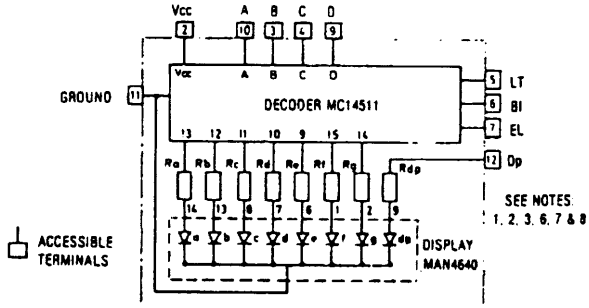


## 84 217 - A10

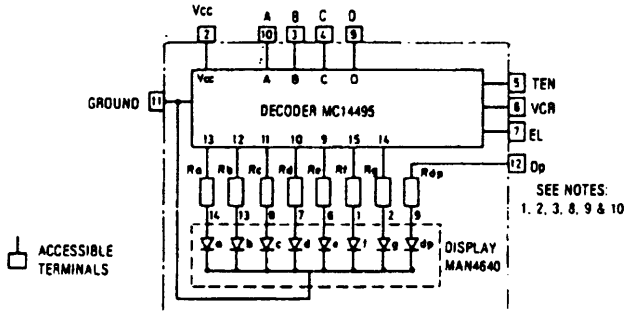


## 84 217 - A11

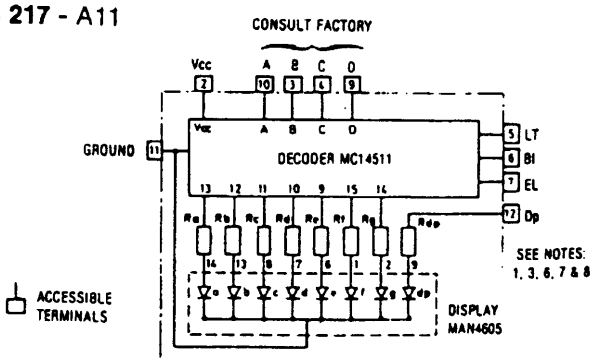

# L.E.D. Readouts - Wiring Diagrams

**Notes:**

1. Vcc = 5, 12, 15 or 24 V according to the model (5 V standard - 12, 15 and 24 V on request).
2. A, B, C and D correspond respectively to 1, 2, 4 and 8 of BCD code.
3. In all C-MOS decoders, it is mandatory that all inputs be connected at ALL times either to the + or the ground (except RBI-RBO - see note 5). The use of bias resistors is therefore necessary (see diagram). Should an input not be used at all, it may be directly connected either to the + or the ground (depending on the function).
4. For TTL decoders, should an input not be connected to either the + or the ground, the decoder might not work properly (while not connected), but it would not be destroyed.
5. The non-significant zeros are cancelled when RBI (Ripple Blanking Input) is connected to the ground, if several modules are connected together the RBI of the module adjacent to the module of the units (eg: ten or tenth) must be connected to the RBO (Ripple Blanking Output) of the next unit (hundred or hundreth) etc. The first RBO's (ten and tenth) as well as the unit's are left unconnected. (the zero of the unit is never cancelled).

   If the zero cancellation is not required, the RBI inputs must be connected to the + of the power supply and RBO must be left unconnected.

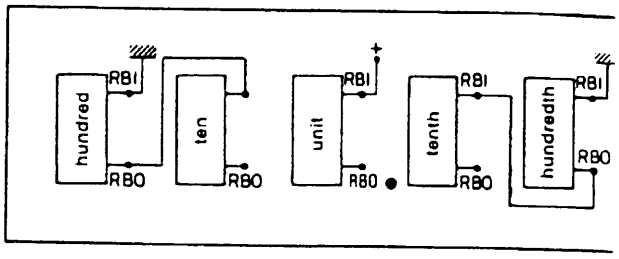


6. Connecting BI (Blanking Input) to the ground can the display (otherwise connect BI to + of supply)
7. Connecting LT (Lamp Test) input to ground make possible to control all segments (otherwise connec to + of supply).
8. Connecting EL (Enable Latch) to + of supply keeps display in memory. Otherwise connect EL to grou
9. TEN output is in state "O" when digits from 0 to 9 displayed and in state "1" when digits from A to F displayed.
10. VCR output is open for displays from O to E. When displayed the state is "0".

**Example of Control of a Readout Module with a Thumbwheel Switch.**

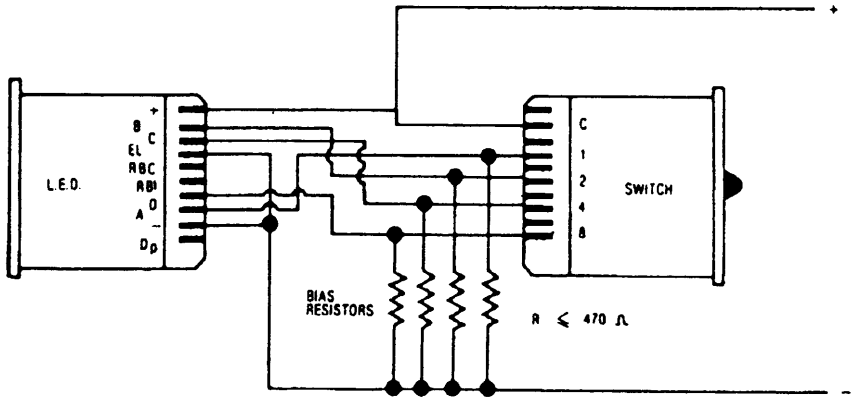

# Digital Switches

## L.E.D. Readouts - How to Order

**Example of order:** [Readout Module] [84 215] [A3] [O] [L] [N] [R] [S]

**1—Description**

**2—Type**

✔ 84 215: width - .62 in. (16 mm), figure height - .43 in. (11 mm)
84 216: width - .31 in. (8 mm), figure height - .35 in (9 mm)
84 217: width - .39 in. (10 mm), figure height - .39 in. (10 mm)

**3—Code Definition**

84 215: Display + resistors (no decoder) ..... A1
84 215: Display + C-MOS decoder ..... A3 ✔
84 215: Display + TTL, and memory decoder ..... A6
84 216: Display + TTL, and memory decoder ..... B
84 217: Display + resistors (no decoder) ..... A1
84 217: Display + C-MOS decoder ..... A3
84 217: Display + TTL, memory decoder ..... A6
84 217: Display + C-MOS, memory decoder ..... A8
84 217: Display + C-MOS, memory decoder ..... A10
84 217: Display +1 + C-MOS, memory decoder ..... A11

**4—Voltages**

—5 volts: 0 ✔
—12 volts: 1
—15 volts: 2
—24 volts: 3

**5—Circuit board**

—Short: C (except for 24 V versions)
—Long: L ✔

**6—Case color**

—Black: N (standard) ✔
—Grey: G (optional)

**7—Color of Display**

—Red: R (for 84 215 and 84 216) ✔
—Orange: O (for 84 217)

**8—Terminations**

—Standard: Solder terminals: S ✔
—Other: for wire wrap: X2 (please consult us)
pins for P.C. Board soldering: X3 (please consult us)
connector (see digital switches: S

**Above example to be read as:**

1—Readout module
2—84 215 - width .62 in. (16 mm); figure height .43 in. (11 mm)
3—C-MOS decoder
4—5 volts
5—Long circuit board
6—Black case
7—Red display
8—Standard solder terminals