Chipsmall Limited consists of a professional team with an average of over 10 year of expertise in the distribution of electronic components. Based in Hongkong, we have already established firm and mutual-benefit business relationships with customers from,Europe,America and south Asia,supplying obsolete and hard-to-find components to meet their specific needs.

With the principle of “Quality Parts,Customers Priority,Honest Operation,and Considerate Service”,our business mainly focus on the distribution of electronic components. Line cards we deal with include Microchip,ALPS,ROHM,Xilinx,Pulse,ON,Everlight and Freescale. Main products comprise IC,Modules,Potentiometer,IC Socket,Relay,Connector.Our parts cover such applications as commercial,industrial, and automotives areas.

We are looking forward to setting up business relationship with you and hope to provide you with the best service and solution. Let us make a better world for our industry!

Contact us

Tel: +86-755-8981 8866 Fax: +86-755-8427 6832
Email & Skype: info@chipsmall.com Web: www.chipsmall.com
Address: A1208, Overseas Decoration Building, #122 Zhenhua RD., Futian, Shenzhen, China

DRAWING MADE IN AMERICAN PROJECTION

©1969 BY AMP INCORPORATED. ALL RIGHTS RESERVED. AMP PRODUCTS COVERED BY PATENTS AND/OR PATENTS PENDING.

THIS PRODUCT DESIGNED AND BUILT BY AMP INCORPORATED. NO LICENSE TO USE THAT DESIGN IN MANUFACTURE, OR TO USE ANY ISSUED OR PENDING PATENTS WHICH ARE INVOLVED, IS IMPLIED.

REVISIONS				
ZONE	LTR	DESCRIPTION	DATE	APPROVED

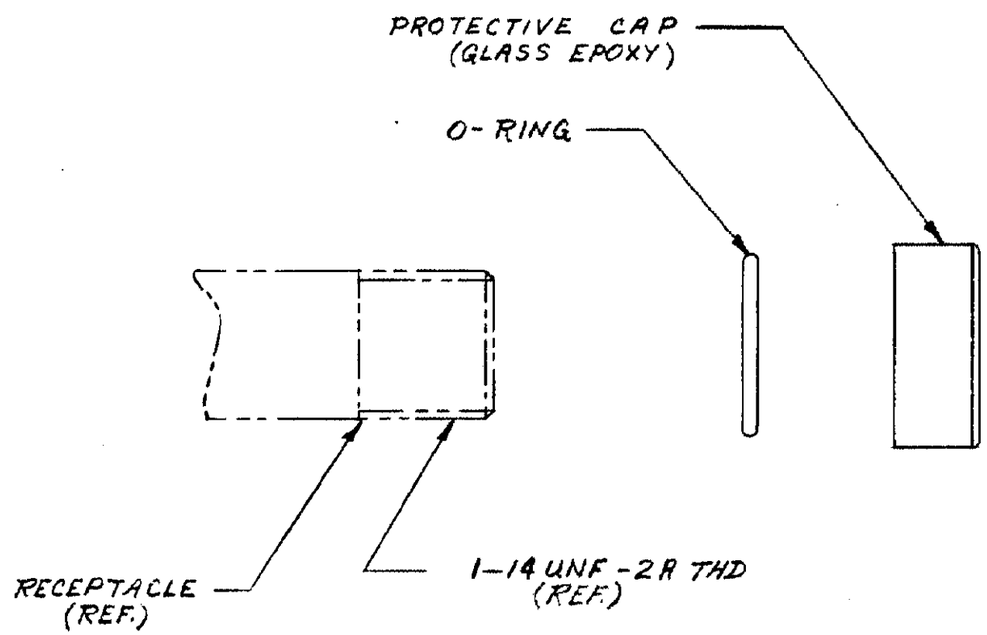

THIS KIT CONSISTS OF THE FOLLOWING ITEMS

1. LGH CAP
2. O-RING
3. INSTRUCTION SHEET.

PART NO. OF THIS DWG — 1

QTY REQD -2	QTY REQD -1	ITEM NO.	DWG SIZE	PART OR IDENTIFYING NO.	NOMENCLATURE OR DESCRIPTION	SYMBOL

PARTS LIST

NEXT ASSY	FINAL ASSY	NEXT ASSY	USED ON
QTY REQD		APPLICATION	

UNLESS OTHERWISE SPECIFIED:
DIMENSIONS ARE IN INCHES
TOLERANCES
.00 = ±
.000 = ±
ANGLES ±

MATERIAL:

FINISH:

CONTRACT NO.
DR 1-10-69
CHK
APPD 1-13-69
APPD
DSGN APPD
OTHER APPD

AMP INCORPORATED
CAPITRON DIVISION
ELIZABETHTOWN, PENNSYLVANIA

NAME
KIT, LGH-4
PROTECTIVE CAP WITH O-RING SEAL

SIZE	CODE IDENT NO.	NUMBER
B	89110	849254

SCALE | WT | SHEET

CUSTOMER DRAWING

AMP 1470 REV 6/66

PRINT SIZE