Chipsmall Limited consists of a professional team with an average of over 10 year of expertise in the distribution of electronic components. Based in Hongkong, we have already established firm and mutual-benefit business relationships with customers from,Europe,America and south Asia,supplying obsolete and hard-to-find components to meet their specific needs.

With the principle of “Quality Parts,Customers Priority,Honest Operation,and Considerate Service”,our business mainly focus on the distribution of electronic components. Line cards we deal with include Microchip,ALPS,ROHM,Xilinx,Pulse,ON,Everlight and Freescale. Main products comprise IC,Modules,Potentiometer,IC Socket,Relay,Connector.Our parts cover such applications as commercial,industrial, and automotives areas.

We are looking forward to setting up business relationship with you and hope to provide you with the best service and solution. Let us make a better world for our industry!

Contact us

Tel: +86-755-8981 8866 Fax: +86-755-8427 6832
Email & Skype: info@chipsmall.com Web: www.chipsmall.com
Address: A1208, Overseas Decoration Building, #122 Zhenhua RD., Futian, Shenzhen, China

THIS DRAWING IS UNPUBLISHED. RELEASED FOR PUBLICATION 20
© COPYRIGHT 20 BY - ALL RIGHTS RESERVED.

REVISIONS

P	LTR	DESCRIPTION	DATE	DWN	APVD
	A1	REVISED (ECR-16-007323)	19.MAY.'16	JM	JW

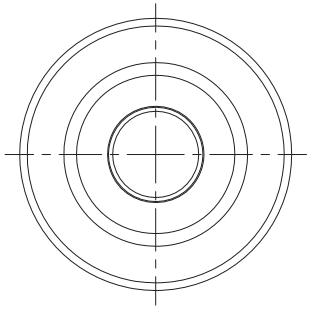

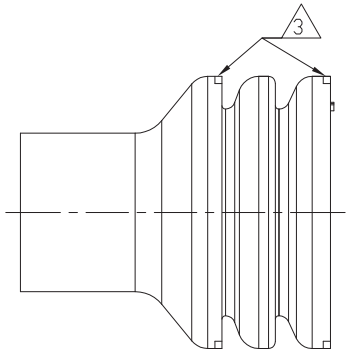

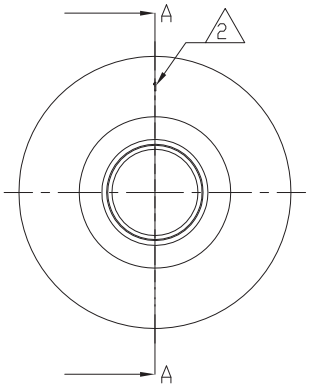

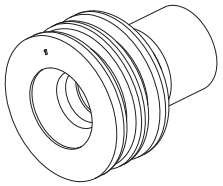

ISO VIEW

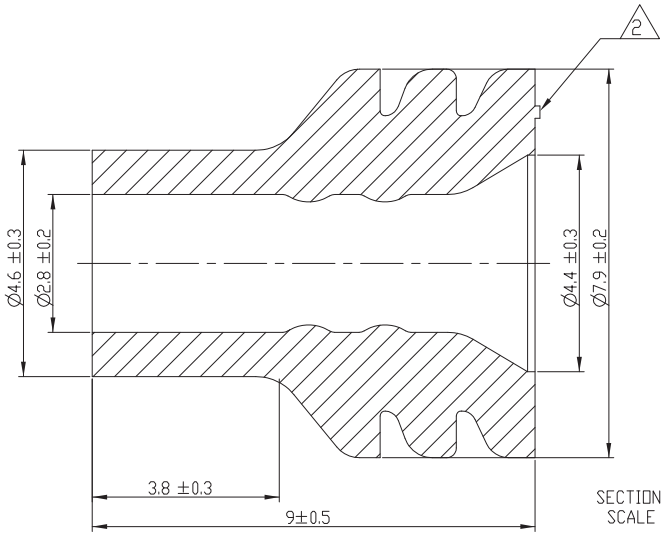

SECTION A-A
SCALE 10:1

NOTES.
A1 1. MATERIAL: NBR(HARDNESS 40 ±5°, LUBRICATED CONTAIN 5% OIL)
2. CAVITY MARK: 0.25mm LETTERS (MAX. 0.1mm RAISED)
3. APPLICABLE OPTION FIGURE BY MANUFACTURING PROCESS BUT MUST BE NO PROBLEM IN FUNCTION.

COLOR	MATERIAL	P/N	REV.
BLACK	1	85011-1	A

THIS DRAWING IS A CONTROLLED DOCUMENT.

DIMENSIONS: mm

TOLERANCES UNLESS OTHERWISE SPECIFIED:
0 PLC ±
1 PLC ±
2 PLC ±
3 PLC ±
4 PLC ±
ANGLES ±

MATERIAL: SEE NOTE
FINISH: -

DWN: JM JEON
CHK: -
APVD: JW JUNG
PRODUCT SPEC: -
APPLICATION SPEC: -
WEIGHT: -

TE Connectivity

NAME: WIRE SEAL FOR 187 SLD 2P CONN'R (INSULATION DIA: Ø2.9-3.8mm)

SIZE	CAGE CODE	DRAWING NO	RESTRICTED TO
A3	-	C-85011	-

CUSTOMER DRAWING | SCALE 7:1 | SHEET 1 OF 1 | REV A1

1470-19 (3/13)