Chipsmall Limited consists of a professional team with an average of over 10 year of expertise in the distribution of electronic components. Based in Hongkong, we have already established firm and mutual-benefit business relationships with customers from,Europe,America and south Asia,supplying obsolete and hard-to-find components to meet their specific needs.

With the principle of “Quality Parts,Customers Priority,Honest Operation,and Considerate Service”,our business mainly focus on the distribution of electronic components. Line cards we deal with include Microchip,ALPS,ROHM,Xilinx,Pulse,ON,Everlight and Freescale. Main products comprise IC,Modules,Potentiometer,IC Socket,Relay,Connector.Our parts cover such applications as commercial,industrial, and automotives areas.

We are looking forward to setting up business relationship with you and hope to provide you with the best service and solution. Let us make a better world for our industry!

Contact us

Tel: +86-755-8981 8866 Fax: +86-755-8427 6832
Email & Skype: info@chipsmall.com Web: www.chipsmall.com
Address: A1208, Overseas Decoration Building, #122 Zhenhua RD., Futian, Shenzhen, China

DRAWING MADE IN KOREAN PROJECTION

DIMENSIONS IN ~~INCHS~~ . MM

CUSTOMER DRAWING

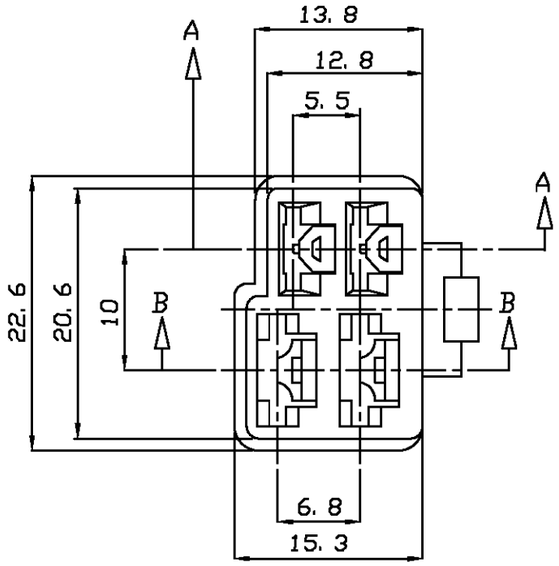

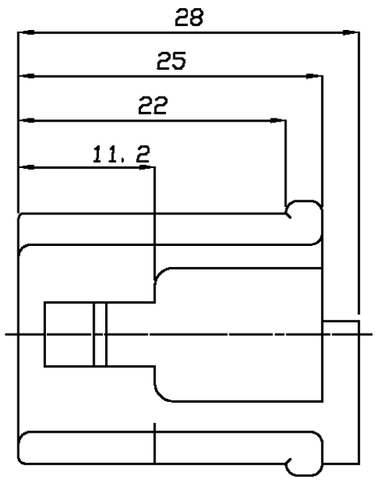

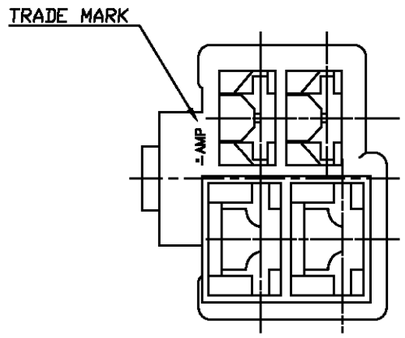

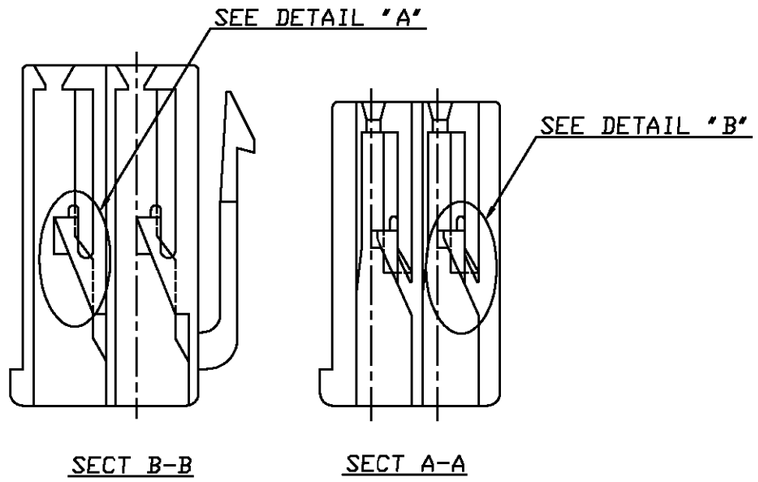

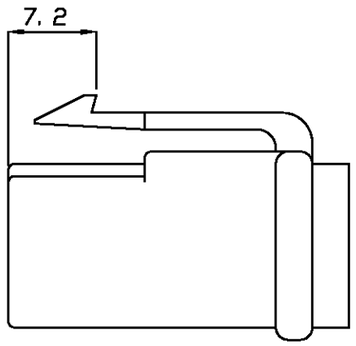

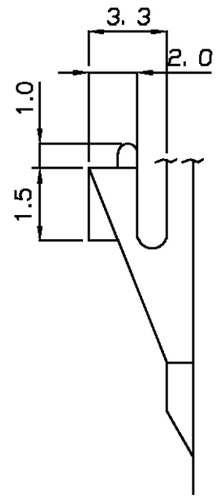

DETAIL "A"

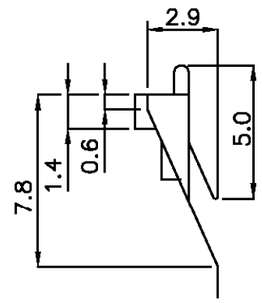

DETAIL "B"

NATURAL	702902-1	85094-1
COLOR	MATERIAL	PART NO.

LTR	REVISION RECORD	DR	CHK	DATE
D	RELEASED ECN(RD97-023)	JW	JK	'97 01/24

© 1997 AMP KOREA
ALL RIGHT RESERVED AMP PRODUCTS COVERED BY PATENTS AND OR PATENTS PENDING

AMP KOREA

WIRE RANGE ---	INSULATION DIA ---	NAME 250/312 HYBRID 4P PLUG HSG			
MATERIAL SEE TABLE	FINISH/COLOR SEE TABLE	TOLERANCES 0<XX<10 ±0.2 10<XX<30 ±0.25 30<XX<100±0.3 ANGLES ±3°	SIZE A3	LOC DS	NUMBER 85094
DR	APP		SCALE 1/1	REV D	SHEET 1/1
CHK	REL				

PRINT DIST.