Chipsmall Limited consists of a professional team with an average of over 10 year of expertise in the distribution of electronic components. Based in Hongkong, we have already established firm and mutual-benefit business relationships with customers from,Europe,America and south Asia,supplying obsolete and hard-to-find components to meet their specific needs.

With the principle of “Quality Parts,Customers Priority,Honest Operation,and Considerate Service”,our business mainly focus on the distribution of electronic components. Line cards we deal with include Microchip,ALPS,ROHM,Xilinx,Pulse,ON,Everlight and Freescale. Main products comprise IC,Modules,Potentiometer,IC Socket,Relay,Connector.Our parts cover such applications as commercial,industrial, and automotives areas.

We are looking forward to setting up business relationship with you and hope to provide you with the best service and solution. Let us make a better world for our industry!

Contact us

Tel: +86-755-8981 8866 Fax: +86-755-8427 6832
Email & Skype: info@chipsmall.com Web: www.chipsmall.com
Address: A1208, Overseas Decoration Building, #122 Zhenhua RD., Futian, Shenzhen, China

Product number	Remarks
85344–001	With notches
85344–002	Without notches

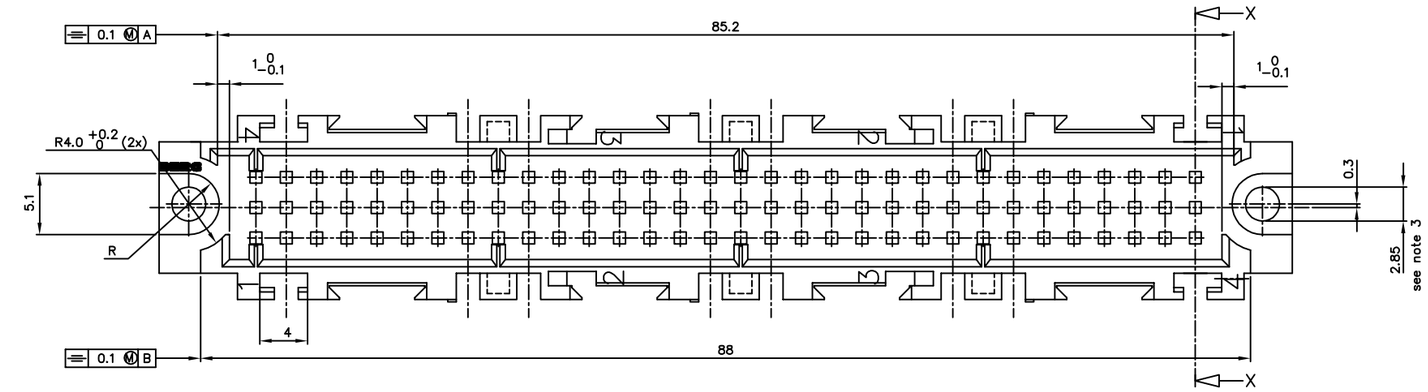

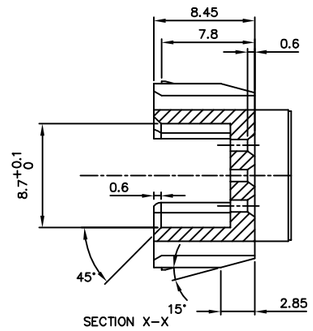

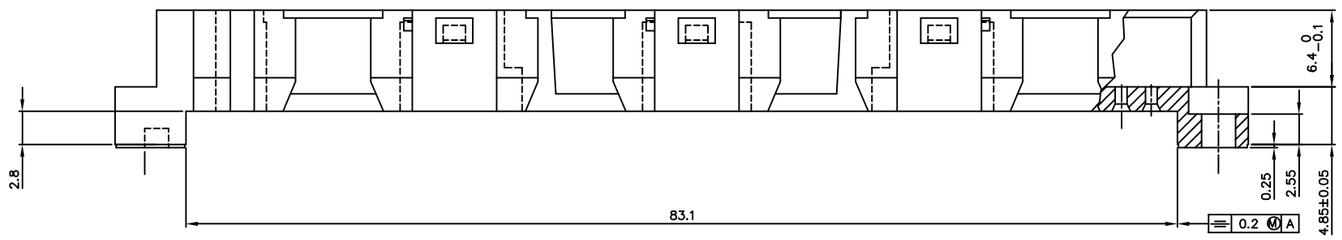

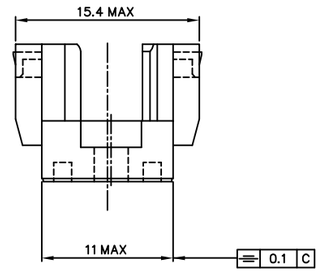

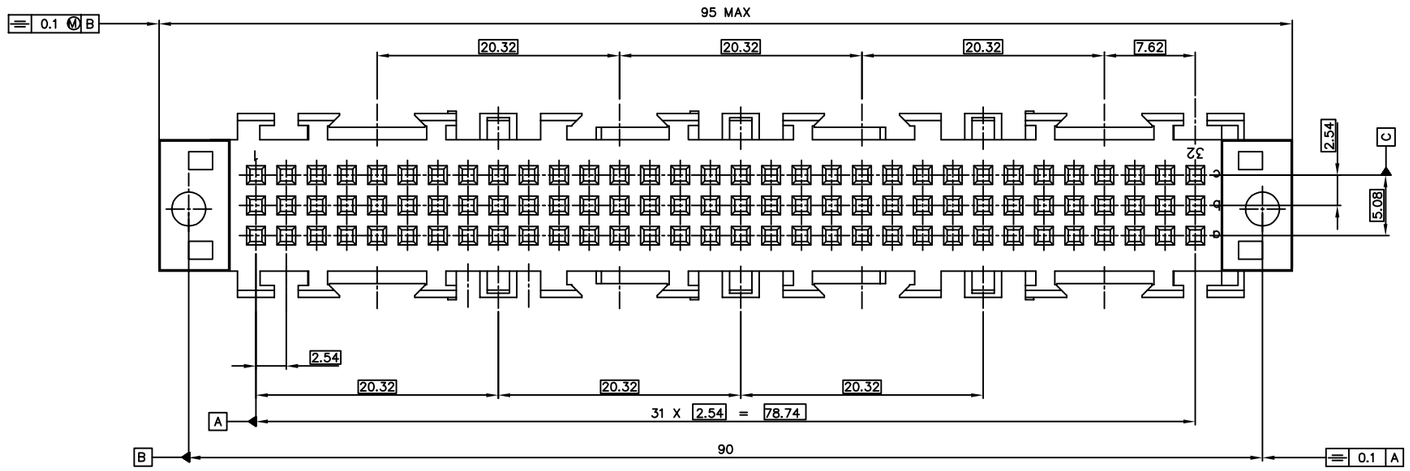

NOTES:–

1. THIS PRODUCT MEETS EUROPEAN UNION DIRECTIVES AND OTHER COUNTRY REGULATIONS AS DESCRIBED IN GS–22–008.
2. LEADFREE OR RoHS DIRECTIVE LABELLING TO BE PROVIDED AS PER GS–14–920.
3. " LF " SUFFIX TO PRODUCT NUMBER FOR RoHS COMPATIBLE/ LEADFREE VERSION.
4. PARTS WITH AND WITHOUT "LF " SUFFIX ARE FORM–FIT AND FUNCTIONALLY IDENTICAL. " LF " SUFFIX PROVIDED FOR PART NUMBER STANDARDISATION OF PART THAT MEETS RoHS REQUIREMENTS.
5. Product with or without modular frame walls (notches), for product number see table
6. Material: PBT thermoplastic polyester 30% glass filled flame retardent per UL–94–V0
7. Max torque of 20 Ncm allowed on M2.5 bolt through mounting ears, if not used in combination with metal shield part number 85350–001

ltr	ecn no	dr	date
C	H50508	RVI	1995–09–08
D	F00406	LLA	2000–05–22
E	I05–0123	MINI	2005–07–27
F	I05–0248	MINI	2005–11–22
G	I06–0083	MINI	2006–06–01

dr	D.LEGRAND	2000–10–10
engr	J.F.NOTTEAU	2000–10–10
chr	RAKHEE GEORGE	2006–06–01
appd	RAKHEE GEORGE	2006–06–01

sheet index	revision	G
	sheet	1

mat'l. code: SEE NOTE
surface: ISO 1302
tolerance: ISO 406 ISO 1101
tolerances unless otherwise specified
angles / linear
projection
mm
scale –

product family: BACKPANEL
title: 3x32 SHROUD WITH LATCH FRAME
dwg no: 85344
sheet 1 of 1
size: A3
type: Product Customer Drawing

form: A3

FCIconnect.com
Copyright FCI

PDM: Rev:G STATUS: Released Printed: May 14, 2011