Chipsmall Limited consists of a professional team with an average of over 10 year of expertise in the distribution of electronic components. Based in Hongkong, we have already established firm and mutual-benefit business relationships with customers from,Europe,America and south Asia,supplying obsolete and hard-to-find components to meet their specific needs.

With the principle of “Quality Parts,Customers Priority,Honest Operation,and Considerate Service”,our business mainly focus on the distribution of electronic components. Line cards we deal with include Microchip,ALPS,ROHM,Xilinx,Pulse,ON,Everlight and Freescale. Main products comprise IC,Modules,Potentiometer,IC Socket,Relay,Connector.Our parts cover such applications as commercial,industrial, and automotives areas.

We are looking forward to setting up business relationship with you and hope to provide you with the best service and solution. Let us make a better world for our industry!

Contact us

Tel: +86-755-8981 8866 Fax: +86-755-8427 6832
Email & Skype: info@chipsmall.com Web: www.chipsmall.com
Address: A1208, Overseas Decoration Building, #122 Zhenhua RD., Futian, Shenzhen, China

LEAD-FREE PART NUMBER	PCB THICKNESS
85985-001LF	3.2 mm

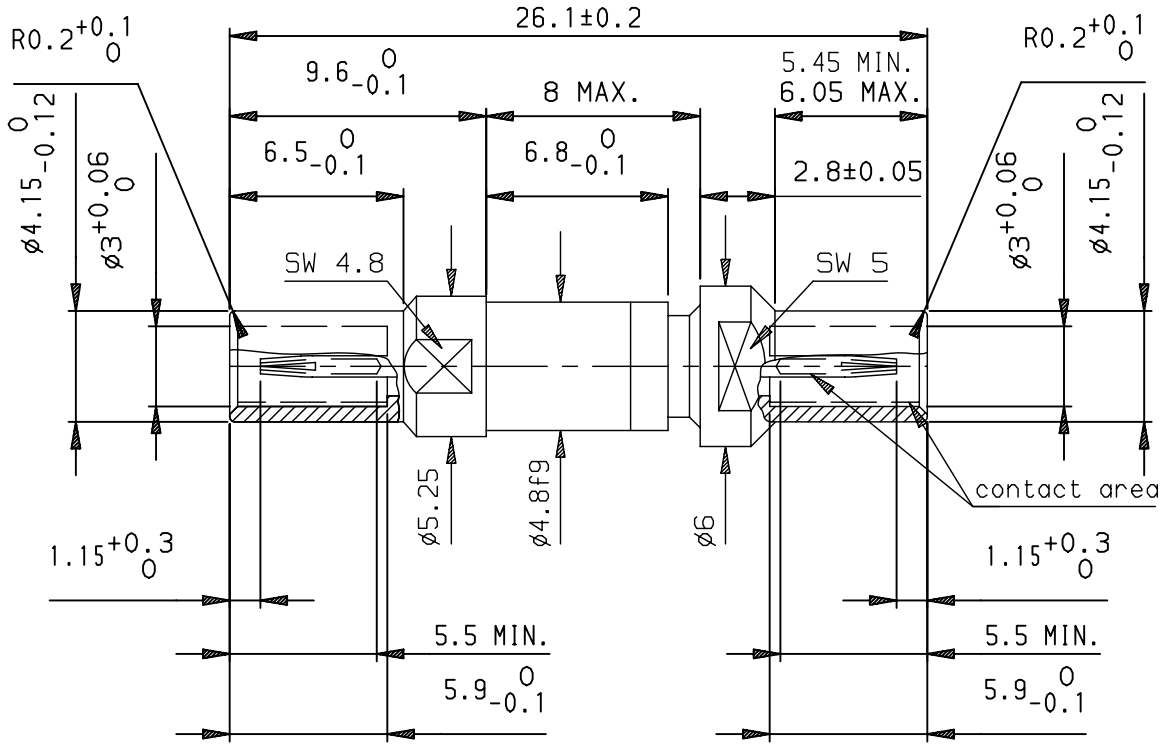

1.3µm Au MIN
PLATING CONTACT AREA

NOTES:
1 UNDERPLATING Ni
2 DIM. ACC. DIN 41626
3 GEN. TOL. ±0.10
4. THIS PRODUCT WITH "LF" SUFFIX MEETS EURPOEAN UNION DIRECTIVES AND OTHER COUNTRY REGULATIONS AS DESCRIBED IN GS -22-008.
5. THE PRODUCT IS NOT INTENDED TO BE EXPOSED TO A MANUFACTURING SOLDER PROCESS.
6. PACKAGING SPEC: SEE GS-14-920

rev	ecn no	dr	date
D	LS06-0022	LGO	2006/03/06
E	LS07-0214	LGO	2007/08/21
F	LS08-0057	LGO	2008/02/18
-	-	-	-
-	-	-	-
-	-	-	-
-	-	-	-

European Views

www.fciconnect.com

surface ISO 1302 | tolerance std ISO 406 ISO 1101 | projection | mm

TOLERANCES UNLESS OTHERWISE SPECIFIED

Dr	GOISNARD	2006/03/06	ANGULAR	LINEAR	0.X	±0.1
Eng	GOISNARD	2006/03/06			0.XX	±0.1
Chr	LEGARE	2006/03/06	0.XX° ±2°		0.XXX	±0.1
Appr	LEGARE	2006/03/06	Product family		METRAL	

size A3 | Scale 5 | ECN LS08-0057 | Spec ref -

title: DIN COAX RCP
COUPLER ADJUSTABLE

dwg no 85985 | Rev. F

catalog no - | CUSTOMER | sheet 1 of 1

Copyright FCI.

REV F - 2006-04-17

PDM: Rev:F STATUS: Released Printed: Oct 01, 2010