Chipsmall Limited consists of a professional team with an average of over 10 year of expertise in the distribution of electronic components. Based in Hongkong, we have already established firm and mutual-benefit business relationships with customers from,Europe,America and south Asia,supplying obsolete and hard-to-find components to meet their specific needs.

With the principle of “Quality Parts,Customers Priority,Honest Operation,and Considerate Service”,our business mainly focus on the distribution of electronic components. Line cards we deal with include Microchip,ALPS,ROHM,Xilinx,Pulse,ON,Everlight and Freescale. Main products comprise IC,Modules,Potentiometer,IC Socket,Relay,Connector.Our parts cover such applications as commercial,industrial, and automotives areas.

We are looking forward to setting up business relationship with you and hope to provide you with the best service and solution. Let us make a better world for our industry!

Contact us

Tel: +86-755-8981 8866 Fax: +86-755-8427 6832
Email & Skype: info@chipsmall.com Web: www.chipsmall.com
Address: A1208, Overseas Decoration Building, #122 Zhenhua RD., Futian, Shenzhen, China

DRAWING MADE IN AMERICAN PROJECTION

©1973 BY AMP INCORPORATED. ALL RIGHTS RESERVED. AMP PRODUCTS COVERED BY PATENTS AND/OR PATENTS PENDING.

Unpublished copy not to be reproduced nor published without written permission of AMP Incorporated

THIS PRODUCT DESIGNED AND BUILT BY AMP INCORPORATED. NO LICENSE TO USE THAT DESIGN IN MANUFACTURE, OR TO USE ANY ISSUED OR PENDING PATENTS WHICH ARE INVOLVED, IS IMPLIED.

REVISIONS

ZONE	LTR	DESCRIPTION	DATE	APPROVED
	A	UP-DATED ECN 8365 RGR	8-16-78	MG
	B	OBSOLETE -1 THRU -4 ECN S31.22	11-13-86	AB
	C	REV PER ECN S-3960	4-14 87	CFB
		REV PER ECN S-3968		

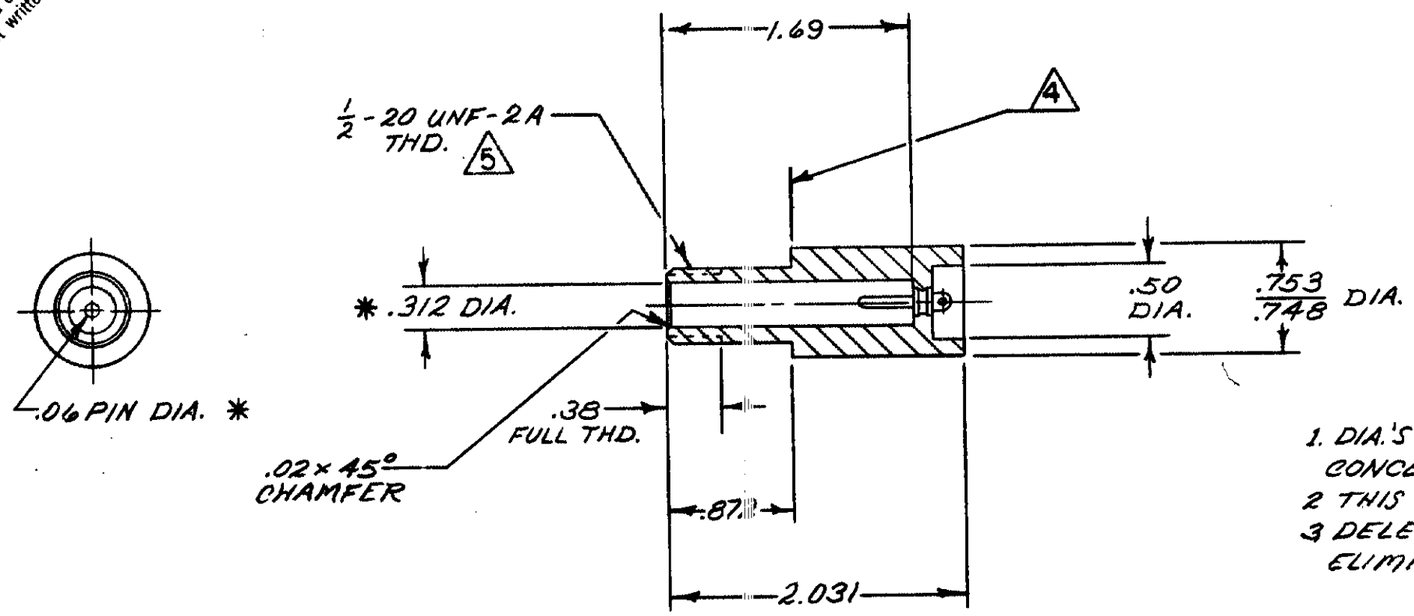

1. DIA.'S MARKED WITH ASTERISK * TO BE CONCENTRIC WITHIN .015 T.I.R.
2. THIS IS A HERMETICALLY SEALED RECEPTACLE
3. DELETE FIRST QUARTER TURN OF THREADS TO ELIMINATE FEATHER EDGE

4 PANEL/CHASSIS POTTING DEPTH DATUM

5 PER FEDERAL STANDARD H-28 3 WIRE METHOD. DIMENSION OVER WIRES TO BE: .497-.510.

QTY REQD -2	QTY REQD -1	ITEM NO.	DWG SIZE	PART OR IDENTIFYING NO.	NOMENCLATURE OR DESCRIPTION	SYMBOL
OBSOLETE				861395-6	SAME AS -4 EXCEPT FINISH RED	
				861395-5	SAME AS -3 EXCEPT FINISH RED	
				861395-4	SAME AS -2 EXCEPT NO HERMETIC SEAL BLACK	
				861395-3	SAME AS -1 EXCEPT NO HERMETIC SEAL BLACK	
				861395-2	TERMINAL CONTACT (GOLD PLATE) BLACK	
				861395-1	TERMINAL CONTACT (TIN PLATE) BLACK	

PARTS LIST

NEXT ASSY	FINAL ASSY	NEXT ASSY	USED ON
QTY REQD		APPLICATION	

UNLESS OTHERWISE SPECIFIED: DIMENSIONS ARE IN INCHES TOLERANCES .00 = ± .010 ANGLES ± .000 = ± .005

MATERIAL: MOLD GLASS EPOXY

FINISH: —

CONTRACT NO.

DR 3/27/73

CHK

APPD 3-29-73

APPD

DSGN APPD

OTHER APPD

AMP INCORPORATED
CAPITRON DIVISION
ELIZABETHTOWN, PENNSYLVANIA

NAME RECEPTACLE

SIZE	CODE IDENT NO.	NUMBER
B	89110	861395

SCALE ~ WT SHEET 1 of 1

CUSTOMER DRAWING

PRINT DIST L 137

AMP 1470 REV 4/69

UP DATED