Chipsmall Limited consists of a professional team with an average of over 10 year of expertise in the distribution of electronic components. Based in Hongkong, we have already established firm and mutual-benefit business relationships with customers from,Europe,America and south Asia,supplying obsolete and hard-to-find components to meet their specific needs.

With the principle of “Quality Parts,Customers Priority,Honest Operation,and Considerate Service”,our business mainly focus on the distribution of electronic components. Line cards we deal with include Microchip,ALPS,ROHM,Xilinx,Pulse,ON,Everlight and Freescale. Main products comprise IC,Modules,Potentiometer,IC Socket,Relay,Connector.Our parts cover such applications as commercial,industrial, and automotives areas.

We are looking forward to setting up business relationship with you and hope to provide you with the best service and solution. Let us make a better world for our industry!

Contact us

Tel: +86-755-8981 8866 Fax: +86-755-8427 6832
Email & Skype: info@chipsmall.com Web: www.chipsmall.com
Address: A1208, Overseas Decoration Building, #122 Zhenhua RD., Futian, Shenzhen, China

PLATING ACTIVE ZONE			CHARACTERISTICS					
500 mating/unmating Ni: 2 µm $^{+2\,\mu m}_{0}$ Au: 1.27 µm min	500 mating/unmating Cu : flash Ni P : 2 µm $^{+2\,\mu m}_{0}$ Au: 0.2 µm min (equivalent 0.8 µm Au)	200 mating/unmating Cu : flash Ni P : 2 µm $^{+2\,\mu m}_{0}$ Au: 0.15 µm min (equivalent 0.4 µm Au)	CURRENT max A	AWG WIRE	mm² AREA	ØA $^{+0.1}_{0}$	ØB±0.1	Clip colour
8638PSC4007LF	8638PSC4006LF	8638PSC4005LF	40	8-10	5-8	4.70	5.50	BLUE
8638PSC3007LF	8638PSC3006LF	8638PSC3005LF	30	9	6	3.75	4.75	WHITE
8638PSC2007LF	8638PSC2006LF	8638PSC2005LF	20	12-14	2-3	2.80	3.70	RED
8638PSC1007LF	8638PSC1006LF	8638PSC1005LF	10	16-18	0.9-1.3	1.80	2.55	BLACK

NOTE: RoHS INFORMATIONS
- The "LF" products meet European union Directives and regulations as described in GS-22-008
- Termination plating spec: Sn pure matte
- Packaging spec: see GS-14-920

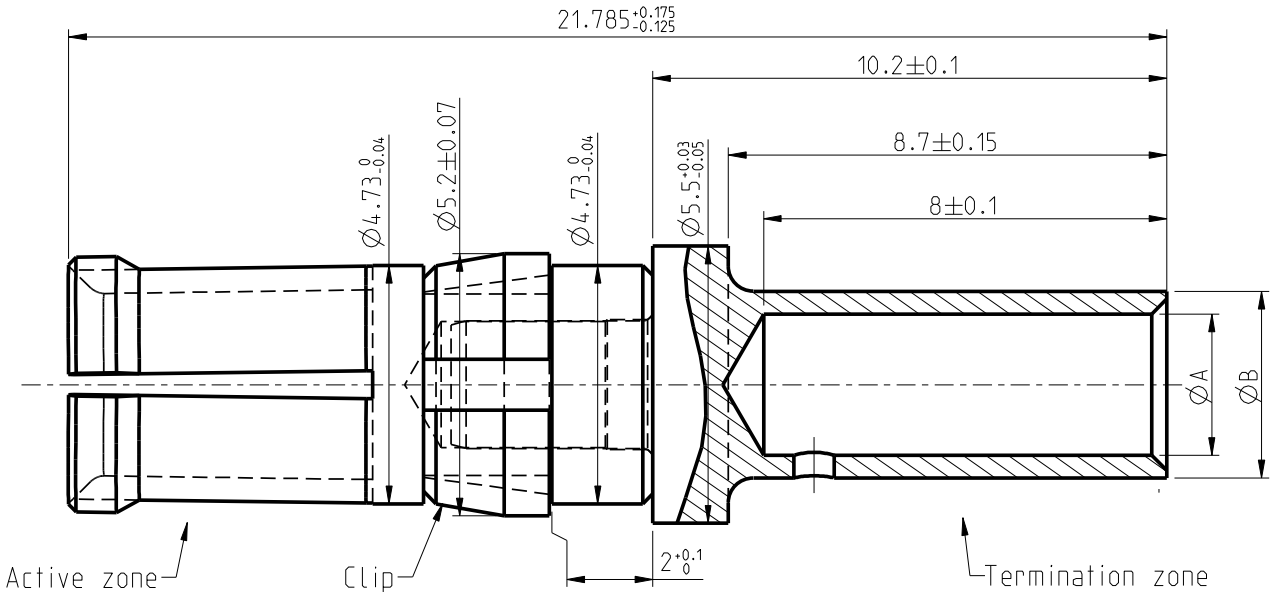

Materials and finish

Active zone: CuZn40 Pb3. Plating: See table
Termination zone (crimping sleeve): CuZn40Pb3
Plating 2 µm $^{+2\,\mu m}_{0}$ Cu 3 µm $^{+3\,\mu m}_{0}$ Tin pure matte
Clip : Thermoset plastic

Technical characteristics

Peak voltage: 750 Veff.
Operating voltage: 500 Veff.
Temperature range -55 °C +125 °C
Packaged per 100
Current capability : see table

Mechanical characteristics :

Crimping test: according to MILC39029
Mechanical endurance: 200 or 500 matings/unmatings (see table).
Contact insertion force in insulator:
60N maxi in a hole of 4.80 mm

Examination of product:

Remove all burrs and sharp edges 0.08 maxi
No scratch allowed

Mark with
/

rev	ecn no	dr	date
F	---	JAR	2002/02/28
G	LS05-006	MPE	2005/04/14
H	LS06-0097	LGO	2006/07/27
J	LS08-0029	MPE	2008/01/28
K	F09-0054	LSA	2009/06/10
L	F10-0031	GPE	2010/04/12

Material	SEE NOTES		Spec ref		
Mat code	-		surface - ✓ ISO 1302	tolerance ISO 405 ISO 1101	projection mm
Heattreat	-				
Plating/Finish	SEE TABLE + NOTES				
Dr	JARRY	1994/10/14			size A3 / Scale 10:1
Eng	PESSON	1994/10/14	Product family	-	
Chr	LEGARE	1994/10/14	Model Name	8638PSC200XLF	ECN F10-0031
Appr	LEGARE	1994/10/14	Model Revision	1	REL Level

title: FEMALE POWER CONTACT
FOR CRIMPED CONNECTION

dwg no: C01-8638-0326 Rev. L

Pro/E file | catalog no - | Customer | sheet 1 of 1

PDM: Rev:L STATUS: Released Printed: Oct 01, 2010

FCI CONFIDENTIAL

This document is the property of and embodies CONFIDENTIAL and PROPRIETARY information of FCI. No part of the information shown on this document may be used in any way or disclosed to others without the written consent of FCI. Copyright FCI.

REV E - 2004-03-28