Chipsmall Limited consists of a professional team with an average of over 10 year of expertise in the distribution of electronic components. Based in Hongkong, we have already established firm and mutual-benefit business relationships with customers from,Europe,America and south Asia,supplying obsolete and hard-to-find components to meet their specific needs.

With the principle of “Quality Parts,Customers Priority,Honest Operation,and Considerate Service”,our business mainly focus on the distribution of electronic components. Line cards we deal with include Microchip,ALPS,ROHM,Xilinx,Pulse,ON,Everlight and Freescale. Main products comprise IC,Modules,Potentiometer,IC Socket,Relay,Connector.Our parts cover such applications as commercial,industrial, and automotives areas.

We are looking forward to setting up business relationship with you and hope to provide you with the best service and solution. Let us make a better world for our industry!

Contact us

Tel: +86-755-8981 8866 Fax: +86-755-8427 6832
Email & Skype: info@chipsmall.com Web: www.chipsmall.com
Address: A1208, Overseas Decoration Building, #122 Zhenhua RD., Futian, Shenzhen, China

ROHS COMPLIANT

PRODUCT DATA DRAWING

REVISION HISTORY			
REV	DESCRIPTION	DATE	APPROVED
-	DCN 43165	03/17	MAL

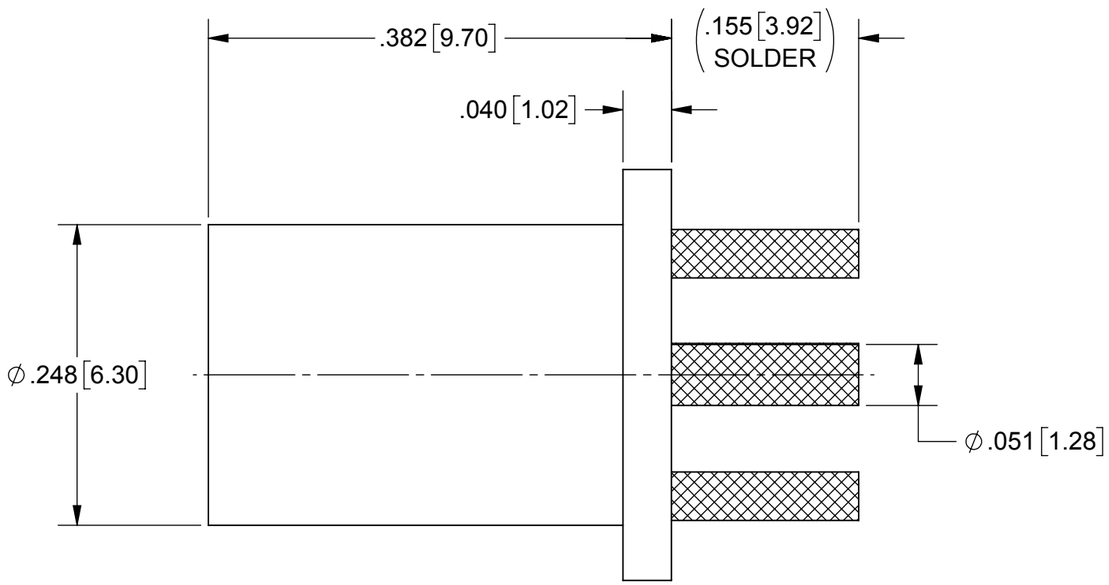

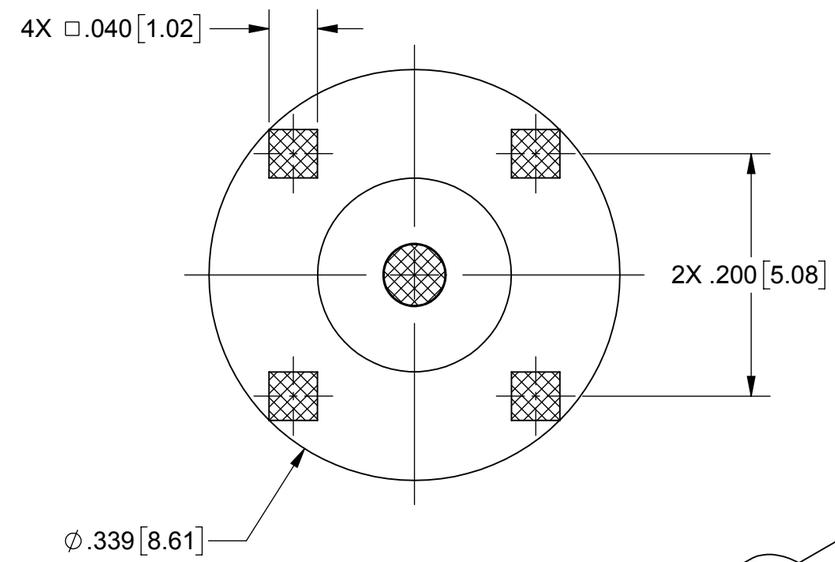

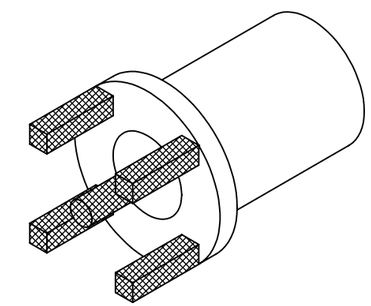

MATERIAL:

BODY: STAINLESS STEEL PER AMS-5640, ALLOY UNS S30300, TYPE 1

CONTACT: BERYLLIUM COPPER PER ASTM B196, ALLOY No. UNS C17300, TD04

INSULATOR: PTFE PER ASTM D1710, TYPE I, GRADE 1, CLASS B

FINISH:

BODY& CONTACT: GOLD PER ASTM B488, TYPE II, CODE C, CLASS 0.76; OVER NICKEL PER AMS-QQ-N-290, CLASS 1, .000050" MIN

PERFORMANCE:

IMPEDANCE: 50 OHMS
FREQ. RANGE: DC TO 2.0 GHz

NOTES:

1. FOR RECOMMENDED FOOTPRINT TO YOUR SPECIFIC PCB, CONTACT SV MICROWAVE SALES DEPARTMENT (sales@svmicro.com, 561-840-1800)
2. TO BE TIN DIPPED USING Sn96 SOLDER
3. ALL DIMENSIONS APPLY PRIOR TO SOLDER DIPPING

MATERIAL: SEE NOTES
FINISH: SEE NOTES
SURFACE AREA: N/A

PROPRIETARY

THE INFORMATION CONTAINED IN THIS DRAWING IS THE SOLE PROPERTY OF SV MICROWAVE, INC. ANY REPRODUCTION IN PART OR AS A WHOLE WITHOUT THE WRITTEN PERMISSION OF SV MICROWAVE, INC IS PROHIBITED.

DIMENSIONS ARE IN INCHES TOLERANCES:
FRACTIONAL: ±1/64 ANGULAR: X° ±1°0' X°X' ±15'
DECIMAL: .X ±.030 .XX ±.010 .XXX ±.005
INTERPRET DIMENSIONS AND TOLERANCES PER ASME Y14.5M - 1994

THIRD ANGLE PROJECTION

UNLESS OTHERWISE SPECIFIED
1) ALL DIMENSIONS ARE IN INCHES [MILLIMETERS]
2) ALL DIMENSIONS ARE AFTER PLATING.
3) BREAK CORNERS & EDGES .005 R. MAX.
4) CHAM. 1ST & LAST THREADS.
5) SURFACE ROUGHNESS 63 MIL-STD-10.
6) DIA.'S ON COMMON CENTERS TO BE CONCENTRIC WITHIN .005 T.I.R.
7) REMOVE ALL BURRS

DRAWN:	VB	03/03/17
CHECKED:	MAL	03/03/17
APPROVED:	MAL	03/03/17

Amphenol SV MICROWAVE
2400 Centrepark West Drive, Suite 100
West Palm Beach, FL 33409

TITLE: BZ BOARD MOUNT JACK

SIZE	CAGE CODE	DWG. NO.
B	95077	8821-60021-TD

SCALE: 4:1 SHEET 1 OF 1