Chipsmall Limited consists of a professional team with an average of over 10 year of expertise in the distribution of electronic components. Based in Hongkong, we have already established firm and mutual-benefit business relationships with customers from,Europe,America and south Asia,supplying obsolete and hard-to-find components to meet their specific needs.

With the principle of “Quality Parts,Customers Priority,Honest Operation,and Considerate Service”,our business mainly focus on the distribution of electronic components. Line cards we deal with include Microchip,ALPS,ROHM,Xilinx,Pulse,ON,Everlight and Freescale. Main products comprise IC,Modules,Potentiometer,IC Socket,Relay,Connector.Our parts cover such applications as commercial,industrial, and automotives areas.

We are looking forward to setting up business relationship with you and hope to provide you with the best service and solution. Let us make a better world for our industry!

Contact us

Tel: +86-755-8981 8866 Fax: +86-755-8427 6832
Email & Skype: info@chipsmall.com Web: www.chipsmall.com
Address: A1208, Overseas Decoration Building, #122 Zhenhua RD., Futian, Shenzhen, China

IO SOCKETS

SERIES 898 • UNIVERSAL SERIAL BUS 3.1 TYPE C • TOP MOUNT RECEPTACLE

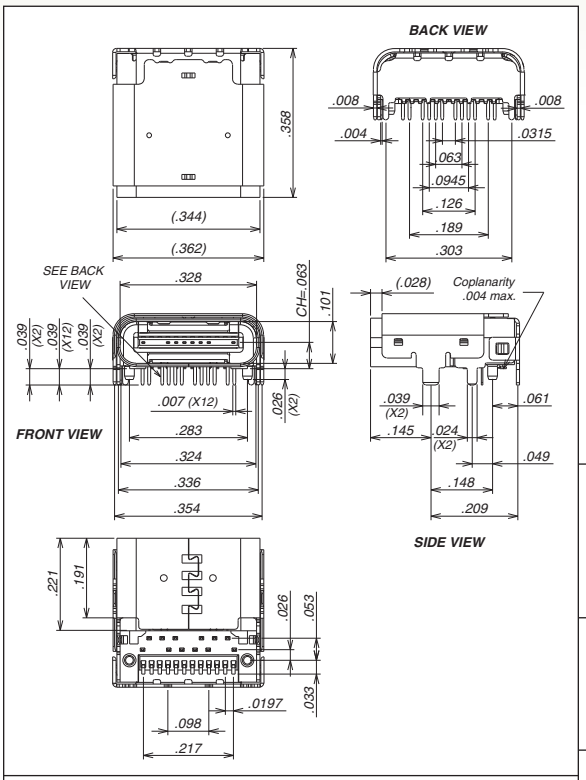

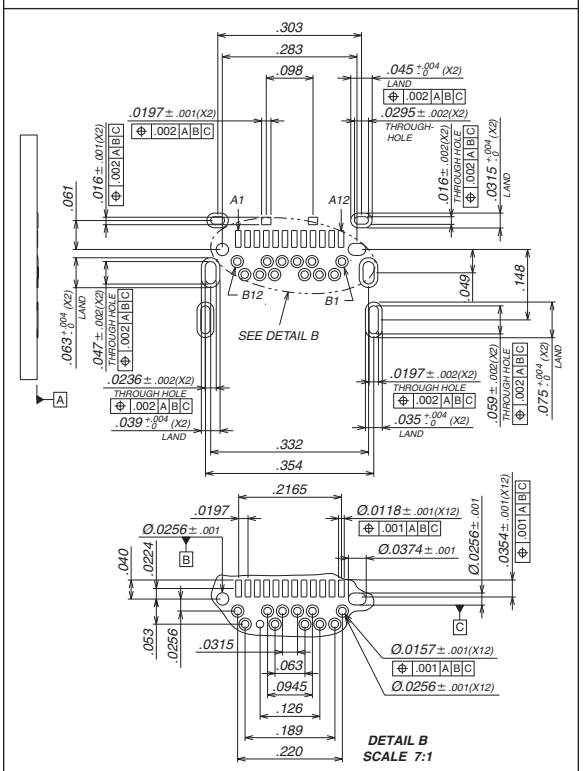

FIG. 1

- USB 3.1 Top Mount, Hybrid Layout
- Full metal housing with enhanced EMI/RFI prevention
- Reversible USB Type C Connector
- 10Gbps Data rate
- 2X faster than USB 3.0 with more efficient data transfer, higher through-put & improved I/O power efficiency
- For Storage, Smartphone, Tablet, Notebook, Docking, Automotive & Home Entertainment

ORDERING INFORMATION

FIG. 1	**Top Mount Type C Receptacle, Hybrid Layout**
	898-73-024-90-310001
	(Tape & Reel Packaged, 550 parts per 13" reel)

Technical Specifications

RoHS-2 2011/65/EU

Materials:

Terminals: Copper Alloy, Tin-Plated
Contacts: Copper Alloy, 30 µ" Gold-Plated
Casing and Shield: Stainless Steel
Insulator material: High temperature thermoplastic rated UL94V-0

General Specifications:

Temperature Range:
Operating: -55°C to +85°C
Nominal: +20°C

Electrical:

Voltage: 50VAC (rms)
LLCR: 40mΩ (initial), Δ10mΩ (after)
Dielectric Strength: 100VAC
Insulation resistance: 100MΩ min.
Current Rating: VBUS and GND contacts rated @ 1.25A each, paralleled for a total of 5A

Mechanical:

Durability: 10,000 cycles
Insertion force: 20 Newtons max.
Extraction force: 8 Newtons min., 20 Newtons max.

MILL-MAX® Mill-Max Mfg. Corp. • 190 Pine Hollow Road, P.O. Box 300, Oyster Bay, NY 11771 • 516-922-6000 • Fax: 516-922-9253 • www.mill-max.com