Chipsmall Limited consists of a professional team with an average of over 10 year of expertise in the distribution of electronic components. Based in Hongkong, we have already established firm and mutual-benefit business relationships with customers from,Europe,America and south Asia,supplying obsolete and hard-to-find components to meet their specific needs.

With the principle of “Quality Parts,Customers Priority,Honest Operation,and Considerate Service”,our business mainly focus on the distribution of electronic components. Line cards we deal with include Microchip,ALPS,ROHM,Xilinx,Pulse,ON,Everlight and Freescale. Main products comprise IC,Modules,Potentiometer,IC Socket,Relay,Connector.Our parts cover such applications as commercial,industrial, and automotives areas.

We are looking forward to setting up business relationship with you and hope to provide you with the best service and solution. Let us make a better world for our industry!

Contact us

Tel: +86-755-8981 8866 Fax: +86-755-8427 6832
Email & Skype: info@chipsmall.com Web: www.chipsmall.com
Address: A1208, Overseas Decoration Building, #122 Zhenhua RD., Futian, Shenzhen, China

CONVERSION CHART	
INCH	MM
.002	0.05
.005	0.13
.010	0.25
.020	0.51
.035	0.89
.100	2.54
.125	3.18
.135	3.43
.180	4.57
.180 .150	4.57 3.82
.300	7.62
.400	10.16
.600	15.24
.700	17.78
.800	20.32
1.000	25.40
1.200	30.48
1.400	35.56
1.800	45.72
2.000	50.8
2.100	53.34
2.400	60.96
3.200	81.28

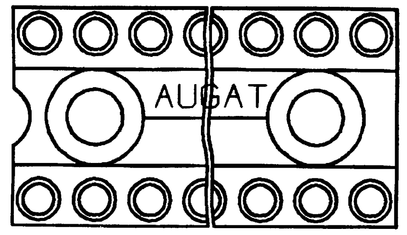

FIG. 1

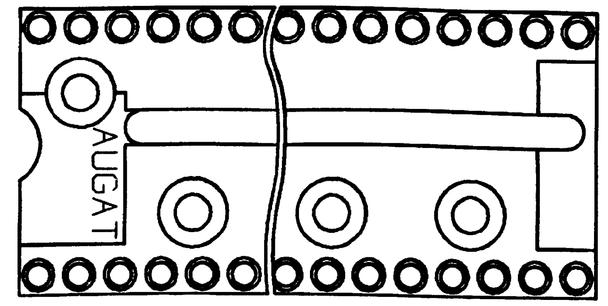

FIG. 2

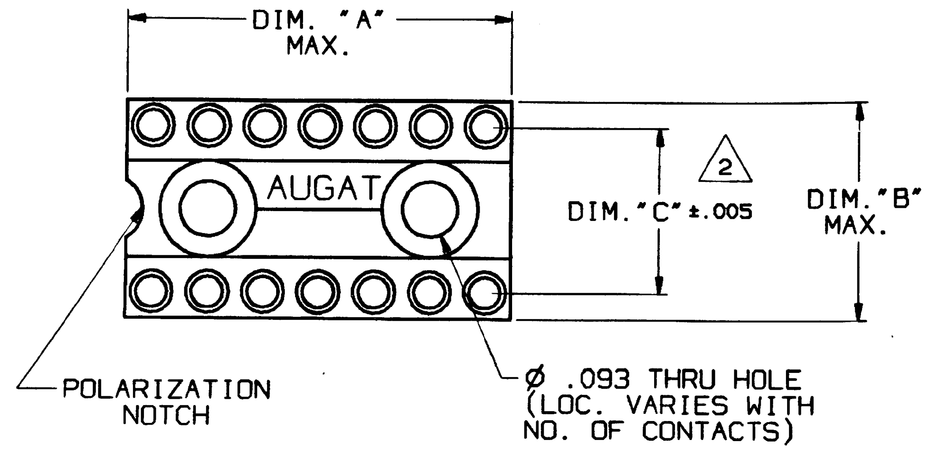

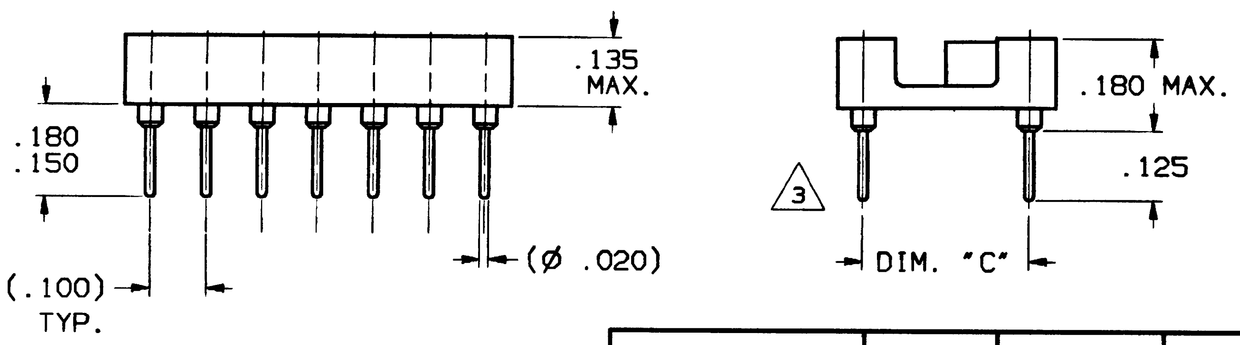

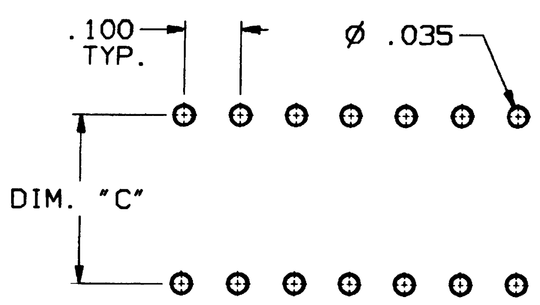

P.C.B. HOLE LAYOUT

TOLERANCE ±.002

THIS IS A C.A.D. GENERATED DRAWING.
DO NOT MAKE MANUAL REVISIONS TO MASTER.

PART NUMBER	FIG.	DIM. "A"	DIM. "B"	DIM. "C" 2
514-AG10D-ES 514-AG11D-ES 514-AG11D-ESL	1	.700	.400	.300
516-AG10D-ES 516-AG11D-ES 516-AG11D-ESL	1	.800	.400	.300
520-AG10D-ES 520-AG11D-ES 520-AG11D-ESL	1	1.000	.400	.300
524-AG10D-ES 524-AG11D-ES 524-AG11D-ESL	2	1.200	.700	.600
528-AG10D-ES 528-AG11D-ES 528-AG11D-ESL	2	1.400	.700	.600
532-AG10D-ES 532-AG11D-ES 532-AG11D-ESL	2	1.600	.700	.600
540-AG10D-ES 540-AG11D-ES 540-AG11D-ESL	2	2.000	.700	.600

SPECIFICATIONS:

MATERIALS:
INSULATOR: POLYESTER, UL RATED 94V-0.
CONTACT: COPPER ALLOY
SLEEVE: COPPER ALLOY.
3 PLATING: 10D-ES - CONTACT - GOLD OVER NICKEL.
SLEEVE - GOLD OVER NICKEL
11D-ES - CONTACT - GOLD OVER NICKEL.
SLEEVE - TIN/LEAD.
11D-ESL- CONTACT - LOW GOLD OVER NICKEL.
SLEEVE - TIN/LEAD.

ELECTRICAL:
1 CONTACT RESISTANCE: 10 MILLIOHMS MAX.
CONTACT RATING: 3 AMPS.
CAPACITANCE: 1.0 pF PER MIL-STD-202, METHOD 305.
INSULATION RESISTANCE: 5000 MΩ MIN. @ 500 VDC PER MIL-STD-1344, METHOD 3003.1.
DIELECTRIC WITHSTANDING VOLTAGE: 1000 VOLTS (RMS) PER MIL-STD-1344, METHOD 3001.1.

MECHANICAL:
1 INSERTION FORCE: 179 GRAMS AVERAGE WHEN MEASURED WITH Ø .018 POLISHED STEEL PIN.
WITHDRAWAL FORCE: 63 GRAMS AVERAGE WHEN MEASURED WITH Ø .018 POLISHED STEEL PIN.

3 1 ENVIRONMENTAL:
OPERATING TEMPERATURE:
TIN/LEAD CONTACT: -63°F TO +221°F (-55°C TO +105°C).
GOLD CONTACT: -63°F TO +261°F (-55°C TO +125°C).

NOTES:

1. INTERPRET DRAWING PER ASME Y14.5M-1994.

3

5 XX - AG XX D - ESX

500 SERIES
POSITIONS
AG= INSULATOR
LSG STYLE & TAIL CONFIGURATION
D = PC TAIL STANDARD .125
CONTACT PLATING GOLD THICKNESS ES, ESL

OUTLINE DRAWING

SPECIFICATIONS ARE SUBJECT TO CHANGES WITHOUT NOTICE

REV	REVISIONS
A	REVISED PER ECO-11-005294 DATE : 16APR11 DR : RK APR : HMR

THIRD ANGLE PROJECTION

TOLERANCES (EXCEPT AS NOTED)
ANGULAR = ±1°
DECIMAL .XX = ±
DECIMAL .XXX = ±.010
DECIMAL .XXXX = ±

UNLESS OTHERWISE SPECIFIED DIMENSIONS ARE IN INCHES DO NOT SCALE PRINT

FILE NAME: 5XXAOUT1
DIRECTORY: PNCODEAS
MATERIAL: SEE SPECIFICATIONS
FINISH: SEE SPECIFICATIONS

ORIGINAL DATE OF DRAWING: 5-31-95
DRAWN: S.KIRCORIAN — DATE: 5-31-95
CHECKED: — DATE:
APPROVED: D.O'NEILL — DATE: 6-2-95
CODE IDENT. NO. 91506 — DWG. SIZE C
NEXT ASSY:

TE Connectivity

TITLE: OUTLINE DRAWING
500 SERIES

DWG. NO. 3 C- 1437532-2 — REV. A
PRODUCT CODE: 6231
SCALE: — SHEET 1 OF 1