Chipsmall Limited consists of a professional team with an average of over 10 year of expertise in the distribution of electronic components. Based in Hongkong, we have already established firm and mutual-benefit business relationships with customers from,Europe,America and south Asia,supplying obsolete and hard-to-find components to meet their specific needs.

With the principle of “Quality Parts,Customers Priority,Honest Operation,and Considerate Service”,our business mainly focus on the distribution of electronic components. Line cards we deal with include Microchip,ALPS,ROHM,Xilinx,Pulse,ON,Everlight and Freescale. Main products comprise IC,Modules,Potentiometer,IC Socket,Relay,Connector.Our parts cover such applications as commercial,industrial, and automotives areas.

We are looking forward to setting up business relationship with you and hope to provide you with the best service and solution. Let us make a better world for our industry!

Contact us

Tel: +86-755-8981 8866 Fax: +86-755-8427 6832
Email & Skype: info@chipsmall.com Web: www.chipsmall.com
Address: A1208, Overseas Decoration Building, #122 Zhenhua RD., Futian, Shenzhen, China

CASE FINISH	CURRENT (AMPS)	WORKING VOLTAGE				MAXIMUM DC RESISTANCE (OHMS)	MAXIMUM VOLTAGE DROP		MINIMUM CAPACITANCE (uF)	MIN. INSERTION LOSS PER MIL-STD-220, FULL LOAD, +25°C												
		-55°C TO +85°C		-55°C TO +125°C																		
		AC	DC	AC	DC		DC	AC		14 KHz	30 KHz	50 KHz	75 KHz	100 KHz	150 KHz	300 KHz	500 KHz	1 MHz	10 MHz	100 MHz	1 GHz	10 GHz
01 TIN	15	---	80	---	50	0.005	0.075	--	1.4	--	17	--	--	--	27	34	--	44	60	70	70	--

PART MARKING:

9004F-100-2017
SCI DATE CODE

BUBBLE PACK MARKING:

9004F-100-2017
SCI DATE CODE
LOT NUMBER
QTY/PACK

MARKING NOTES:

N/A

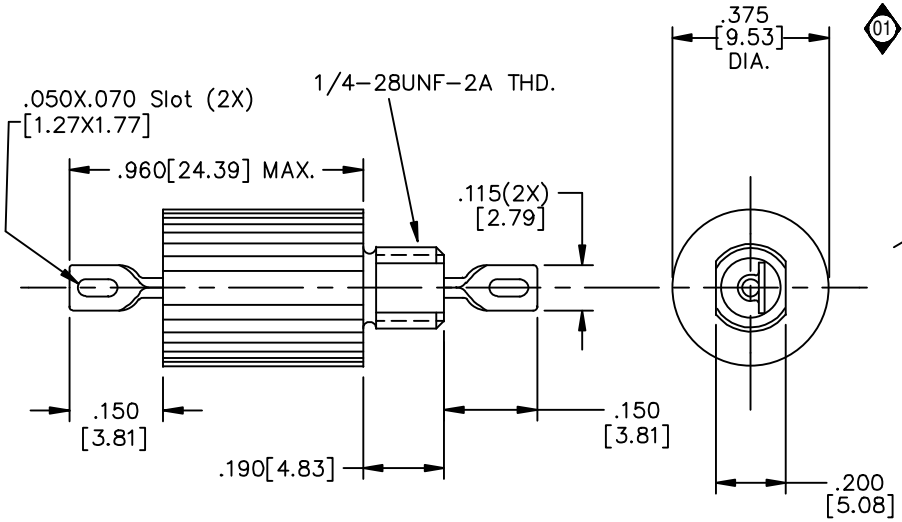

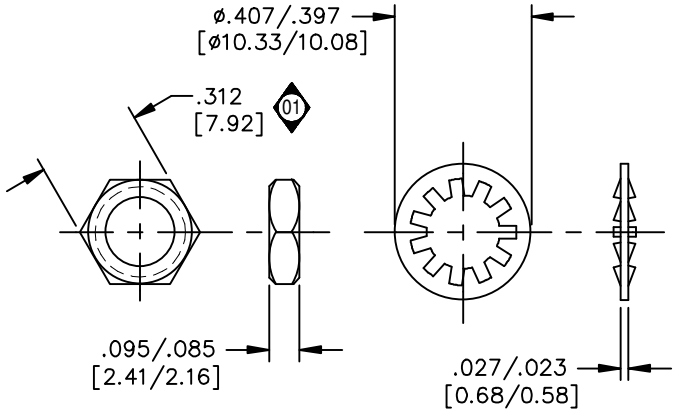

SCHEMATIC

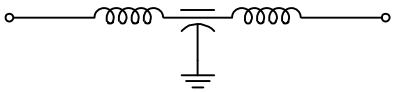

MTG. HARDWARE

RoHS COMPLIANT

NOTES:

01

1) MOUNTING TORQUE NOT TO EXCEED 7in-lbs.
2) MAX. REFLOW TEMP. 260°C FOR 5 SEC.

REV. NO.	CHANGE NOTICE
00	CN 27183-CPD
01	CN 31295-CPD

UNLESS OTHERWISE SPECIFIED DIMENSIONS ARE IN INCHES[mm]. DO NOT SCALE.

THIRD ANGLE PROJECTION

TOLERANCES UNLESS OTHERWISE SPECIFIED
Fractions ±
Dec. .xx±
Dec. .xxx± .010
Angles ±0° 30'

CODE IDENT. NO. OLSP2

SPECTRUM CONTROL INC.

FAIRVIEW PENNSYLVANIA

Dwn. KAUFFMAN
Date 10-09-06
Engr. R. Struchen
Sheet 1 of 1

Description Low Pass EMI Filter

9004F-100-2017

Quality Products From The Specialists In Electro-Magnetic Compatibility