Chipsmall Limited consists of a professional team with an average of over 10 year of expertise in the distribution of electronic components. Based in Hongkong, we have already established firm and mutual-benefit business relationships with customers from,Europe,America and south Asia,supplying obsolete and hard-to-find components to meet their specific needs.

With the principle of “Quality Parts,Customers Priority,Honest Operation,and Considerate Service”,our business mainly focus on the distribution of electronic components. Line cards we deal with include Microchip,ALPS,ROHM,Xilinx,Pulse,ON,Everlight and Freescale. Main products comprise IC,Modules,Potentiometer,IC Socket,Relay,Connector.Our parts cover such applications as commercial,industrial, and automotives areas.

We are looking forward to setting up business relationship with you and hope to provide you with the best service and solution. Let us make a better world for our industry!

Contact us

Tel: +86-755-8981 8866 Fax: +86-755-8427 6832
Email & Skype: info@chipsmall.com Web: www.chipsmall.com
Address: A1208, Overseas Decoration Building, #122 Zhenhua RD., Futian, Shenzhen, China

CASE FINISH	CURRENT (AMPS)	WORKING VOLTAGE				MAXIMUM DC RESISTANCE (OHMS)	MAXIMUM VOLTAGE DROP		MINIMUM CAPACITANCE (uF)	MIN. INSERTION LOSS PER MIL-STD-220, FULL LOAD, +25°C												
		-55°C TO +85°C		-55°C TO +125°C																		
		AC	DC	AC	DC		DC	AC		14 KHz	30 KHz	50 KHz	75 KHz	100 KHz	150 KHz	300 KHz	500 KHz	1 MHz	10 MHz	100 MHz	1 GHz	10 GHz
SOLDER	1	240(400Hz)	450	240(400Hz)	300	0.25	0.25	--	----	--	--	--	--	23	--	54	--	80	80	--	80	--

PART MARKING:

SCI
9011-100-1008
DATE CODE

PACKAGE MARKING:

STANDARD

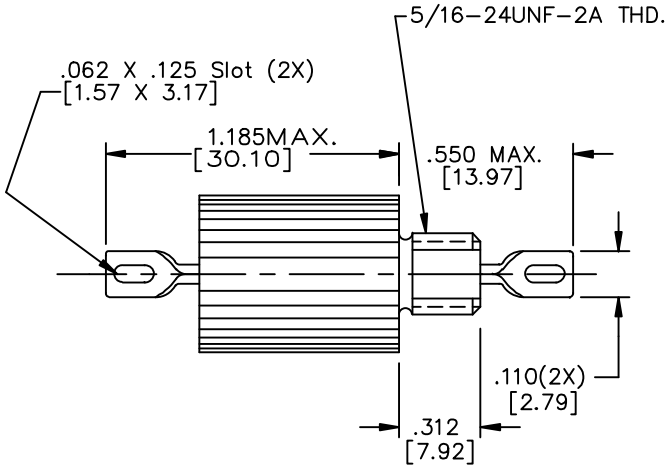

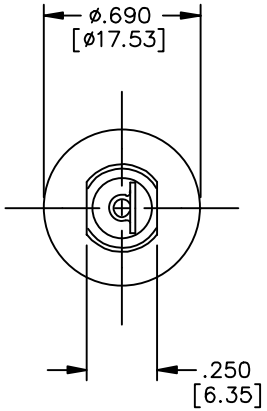

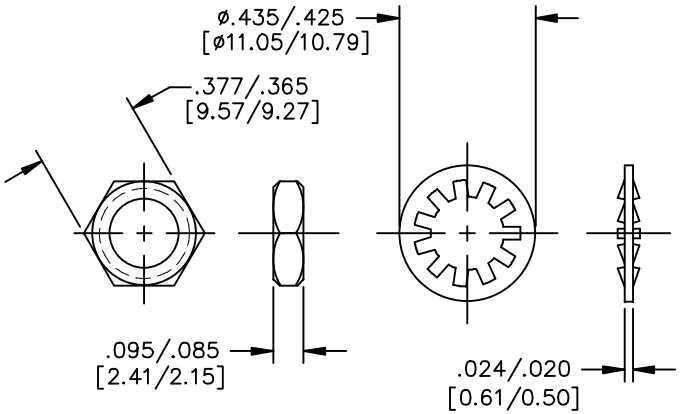

SCHEMATIC

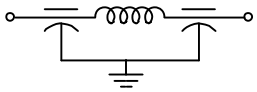

MTG. HARDWARE

MARKING NOTES:

N/A

NOTES:

1) MOUNTING TORQUE NOT TO EXCEED 7in-lbs.

CN. 183705	03	REV. NO.	UNLESS OTHERWISE SPECIFIED DIMENSIONS ARE IN INCHES. [MILLIMETERS] DO NOT SCALE.	TOLERANCES UNLESS OTHERWISE SPECIFIED Fractions ± Dec. .xx± Dec. .xxx± .010 Angles ±0° 30′ CODE IDENT. NO. 0LSP2	SPECTRUM CONTROL INC. ERIE, FAIRVIEW PENNSYLVANIA Dwn. MAYNARD Ckd. 3/5/98 Sheet 1 of 1 Description Low Pass EMI Filter 9011-100-1008
		CHANGE NOTICE			

Quality Products From The Specialists In Electro-Magnetic Compatibility