Chipsmall Limited consists of a professional team with an average of over 10 year of expertise in the distribution of electronic components. Based in Hongkong, we have already established firm and mutual-benefit business relationships with customers from,Europe,America and south Asia,supplying obsolete and hard-to-find components to meet their specific needs.

With the principle of “Quality Parts,Customers Priority,Honest Operation,and Considerate Service”,our business mainly focus on the distribution of electronic components. Line cards we deal with include Microchip,ALPS,ROHM,Xilinx,Pulse,ON,Everlight and Freescale. Main products comprise IC,Modules,Potentiometer,IC Socket,Relay,Connector.Our parts cover such applications as commercial,industrial, and automotives areas.

We are looking forward to setting up business relationship with you and hope to provide you with the best service and solution. Let us make a better world for our industry!

Contact us

Tel: +86-755-8981 8866 Fax: +86-755-8427 6832
Email & Skype: info@chipsmall.com Web: www.chipsmall.com
Address: A1208, Overseas Decoration Building, #122 Zhenhua RD., Futian, Shenzhen, China

CASE FINISH	CURRENT (AMPS)	WORKING VOLTAGE				MAXIMUM DC RESISTANCE (OHMS)	MAXIMUM VOLTAGE DROP		MINIMUM CAPACITANCE (uF)	MIN. INSERTION LOSS PER MIL-STD-220, FULL LOAD, +25°C												
		-55°C TO +85°C		-55°C TO +125°C																		
		AC	DC	AC	DC		DC	AC		14 KHz	30 KHz	50 KHz	75 KHz	100 KHz	150 KHz	300 KHz	500 KHz	1 MHz	10 MHz	100 MHz	1 GHz	10 GHz
GOLD	15	---	80	---	50	0.005	0.075	---	1.4	--	15	--	--	--	28	34	--	44	60	70	70	--

PART MARKING:

9050F-000-0000 (01)
SCI DATE CODE

PACKAGE MARKING:

BUBBLE PACK:
9050-000-0000
SCI DATE CODE
LOT NO.
QTY.

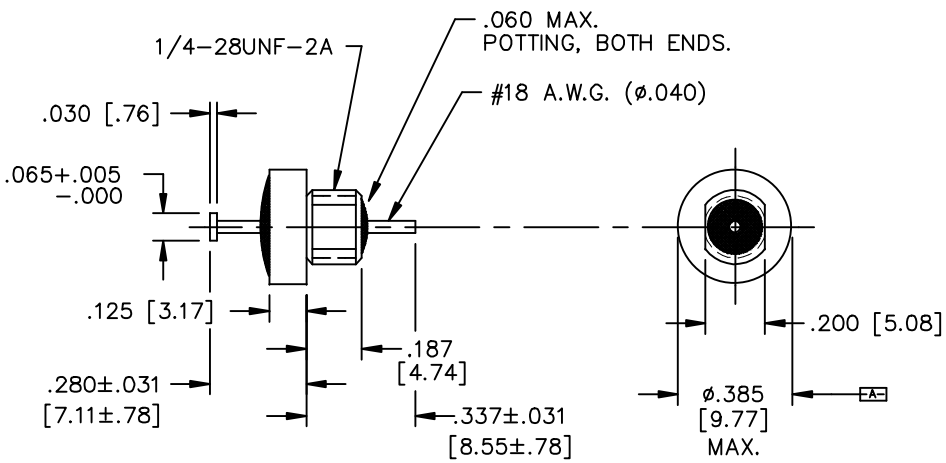

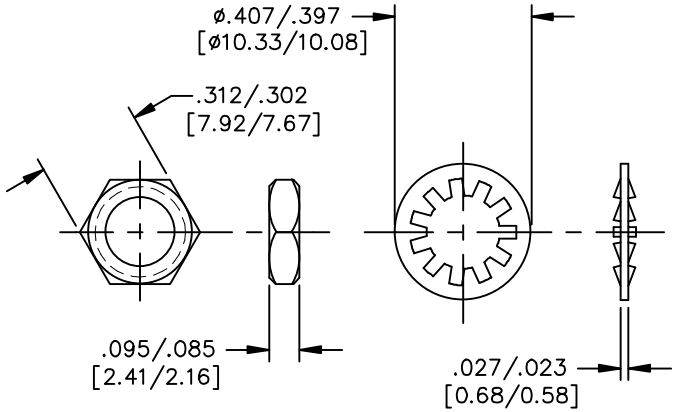

MTG. HARDWARE

MARKING NOTES:

N/A

SCHEMATIC

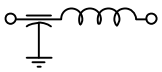

NOTES:

1) MOUNTING TORQUE NOT TO EXCEED 7in-lbs.
2) THIS IS A LEAD FREE PRODUCT.
3) MAX. REFLOW IS 245°C FOR 5 SEC.

REV. NO.	CHANGE NOTICE
01	CN 26308-CPD
00	CN 21016-CPD

UNLESS OTHERWISE SPECIFIED DIMENSIONS ARE IN INCHES [MM]. DO NOT SCALE.

THIRD ANGLE PROJECTION

TOLERANCES UNLESS OTHERWISE SPECIFIED
Fractions ±
Dec. .xx±
Dec. .xxx± .010
Angles ±0° 30'

CODE IDENT. NO. OLSP2

SPECTRUM CONTROL INC.

FAIRVIEW PENNSYLVANIA

Dwn. KAUFFMAN
Date 8-3-05
Engr. T. KERN
Sheet 1 of 1

Description Low Pass EMI Filter

9050F-000-0000

Quality Products From The Specialists In Electro-Magnetic Compatibility