Chipsmall Limited consists of a professional team with an average of over 10 year of expertise in the distribution of electronic components. Based in Hongkong, we have already established firm and mutual-benefit business relationships with customers from,Europe,America and south Asia,supplying obsolete and hard-to-find components to meet their specific needs.

With the principle of “Quality Parts,Customers Priority,Honest Operation,and Considerate Service”,our business mainly focus on the distribution of electronic components. Line cards we deal with include Microchip,ALPS,ROHM,Xilinx,Pulse,ON,Everlight and Freescale. Main products comprise IC,Modules,Potentiometer,IC Socket,Relay,Connector.Our parts cover such applications as commercial,industrial, and automotives areas.

We are looking forward to setting up business relationship with you and hope to provide you with the best service and solution. Let us make a better world for our industry!

Contact us

Tel: +86-755-8981 8866 Fax: +86-755-8427 6832
Email & Skype: info@chipsmall.com Web: www.chipsmall.com
Address: A1208, Overseas Decoration Building, #122 Zhenhua RD., Futian, Shenzhen, China

Zeichnung geschützt durch
© Copyright 1981
AMP DEUTSCHLAND GmbH
Alle Rechte vorbehalten

Index	Änderung	Tag	Name
0	Neuerstellung (~ 350 561)	22.1.81	J. Rö
A	Isolationsdurchmesser ergänzt	26.2.81	J. Rö
B	Tabelle und Notes geändert	4.3.81	J. Rö
C	-2 hinzu	25.11.81	Tuck
H1	REVISION CONFORMITY	11.8.06	R.Vicek
H2	PN 926885-7 OBSOLETE	13.10.11	RP

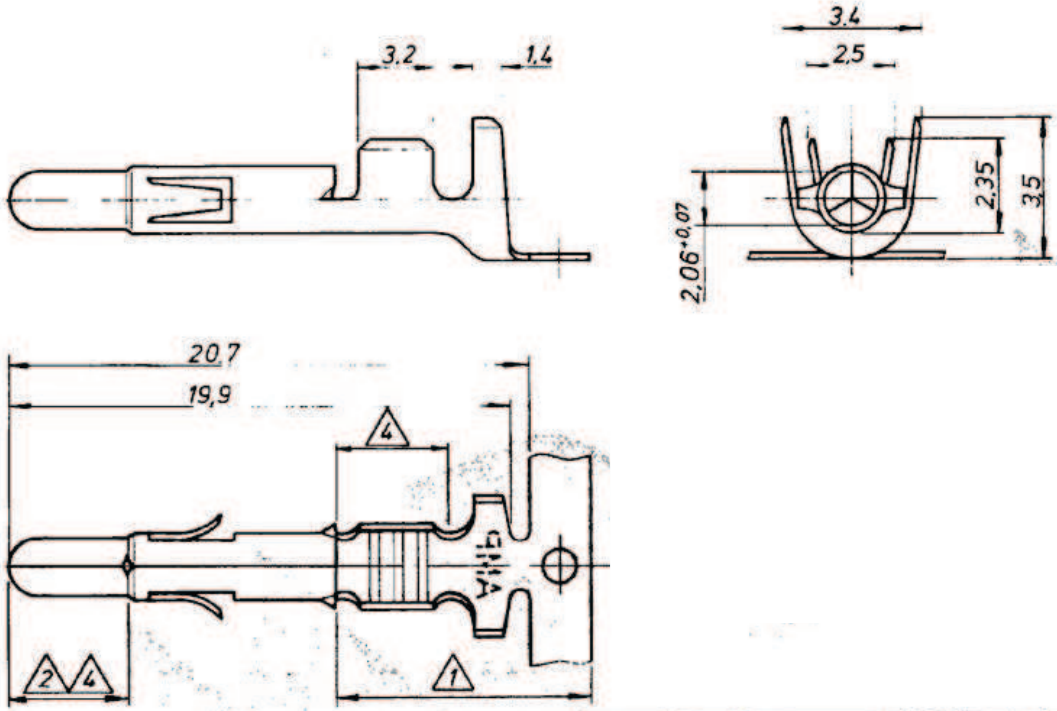

OBSOLETE	~~926 896-7~~	~~926 885-7~~	~~CuZn30~~	~~1 2~~
	926 896-6	926 885-6	CuSn4	1 2
	926 896-3	926 885-3	CuSn4	vorverzinnt
	926 896-2	926 885-2	CuZn30	4
	926 896-1	926 885-1	CuZn30	vorverzinnt
	LOOSE PIECE	Bestell-Nr.	Werkstoff	Oberfläche / Farbe

1. 2-6 µm Sn über Ni in der Crimpzone
2. 0,8 µm Gold über Nickel in der Kontaktzone
3. Für Isolations Φ 1,0 - 2,5 mm geeignet
4. 0,8 µm Au über 1,3 µm Ni in den Drahtcrimp- und Kontaktzonen, sonst 1,3 µm Ni

Gez. 22.1.81 J. Rö | Gepr. 2.2.81 Gr | Gepr.

TE Connectivity

Benennung: Universal M-N-L Stift DGB 0,2-0,8 mm²

K

Nicht tolerierte Maße ± 0,2 mm | Format B | Zeichnungs-Nr. 926885 | H2

Maßstab 5 : 1 | Blatt-Nr.

AMP - E - 654 - 3/76