Chipsmall Limited consists of a professional team with an average of over 10 year of expertise in the distribution of electronic components. Based in Hongkong, we have already established firm and mutual-benefit business relationships with customers from,Europe,America and south Asia,supplying obsolete and hard-to-find components to meet their specific needs.

With the principle of “Quality Parts,Customers Priority,Honest Operation,and Considerate Service”,our business mainly focus on the distribution of electronic components. Line cards we deal with include Microchip,ALPS,ROHM,Xilinx,Pulse,ON,Everlight and Freescale. Main products comprise IC,Modules,Potentiometer,IC Socket,Relay,Connector.Our parts cover such applications as commercial,industrial, and automotives areas.

We are looking forward to setting up business relationship with you and hope to provide you with the best service and solution. Let us make a better world for our industry!

# Contact us

Tel: +86-755-8981 8866 Fax: +86-755-8427 6832
Email & Skype: info@chipsmall.com Web: www.chipsmall.com
Address: A1208, Overseas Decoration Building, #122 Zhenhua RD., Futian, Shenzhen, China

THIS DRAWING IS A CONTROLLED DOCUMENT.
UNCONTROLLED WHEN PRINTED.
© COPYRIGHT 1995
RELEASED FOR PUBLICATION - 1995
FREI FUER VEROEFFENTLICHUNG
ALL RIGHTS RESERVED.
ALLE RECHTE VORBEHALTEN.

MATED WITH
PASSEND ZU
929505

| LOC | DIST |
|---|---|
| A1 | - |

PROJEKT NR.: 85-9385

REVISIONS
ANDERUNGEN

| P | LTR | DESCRIPTION / BESCHREIBUNG | DATE | DWN | APVD |
|---|---|---|---|---|---|
| | N1 | REVISED PER ECO-11-005027 | 21MAY2011 | RK | HMR |
| | N2 | NEW PN 4-929504-2 ADDED | 17JUL2012 | Homolka | S.Krauss |
| | N3 | PN 4-929504-2 REMOVE | 24AUG2012 | Homolka | S.Krauss |
| | N4 | DIMENSION 1.4mm DELETED | 17DEC2012 | Homolka | S.Krauss |

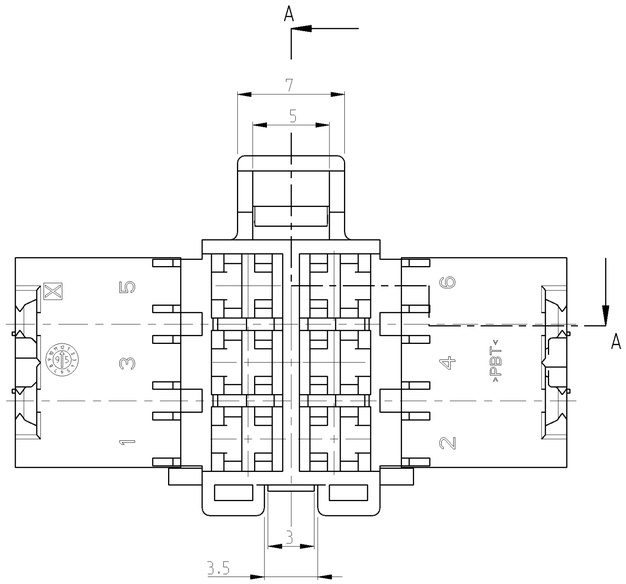


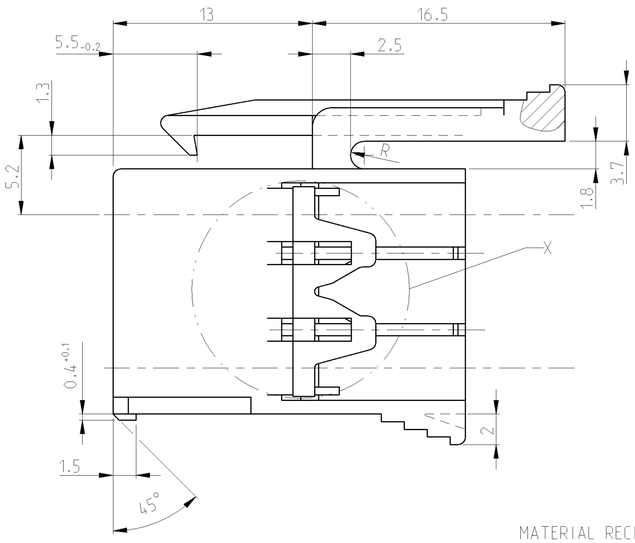


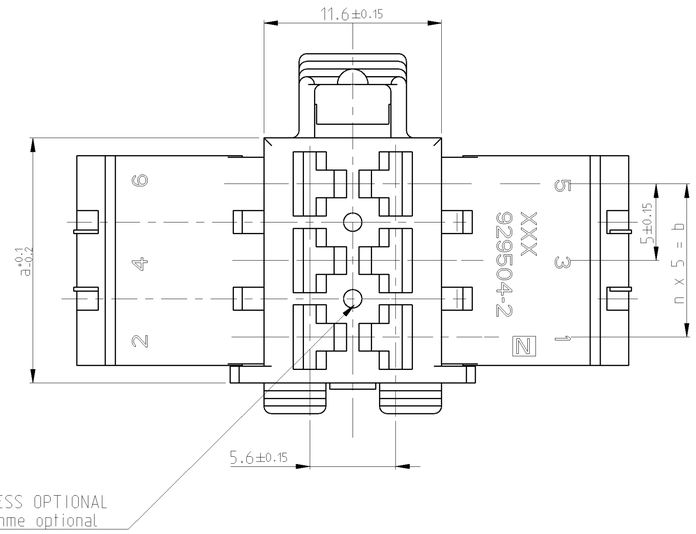


SECTION
Schnitt A-A

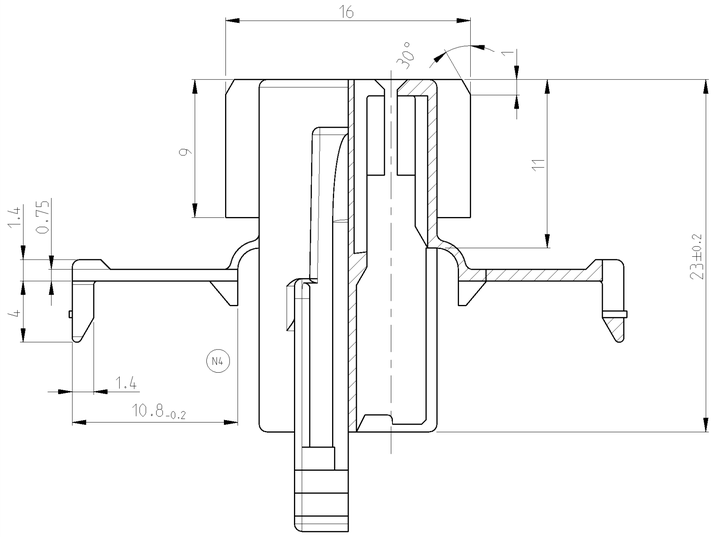


DETAIL X
Einzelheit

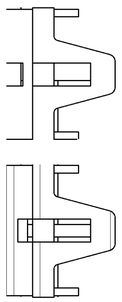

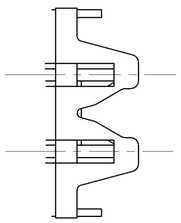

CONTOUR FOR 6POS. JPT-HSG.
Kontur fuer 6pol. JPT-Hsg.

CONTOUR FOR 4 AND 8-22POS.
JPT-HSG.
Kontur fuer 4 u. 8-22pol.
JPT-Hsg.

| | | | | | | | | |
|---|---|---|---|---|---|---|---|---|
| 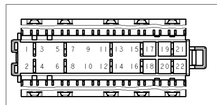 | 50 | 56 | 10 | | BLACK schwarz | 929504-7 | N | 22POS. JPT-HSG. 22pol. JPT-Geh. 9.3g |
| | | | | | NATURAL natur | 1-929504-7 | N | |
| 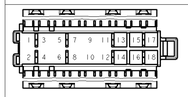 | 40 | 46 | 8 | | BLACK schwarz | 929504-6 | N | 18POS. JPT-HSG. 18pol. JPT-Geh. 7.7g |
| | | | | | NATURAL natur | 1-929504-6 | N | |
| 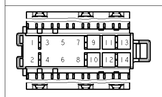 | 30 | 36 | 6 | | BLACK schwarz | 929504-5 | N | 14POS. JPT-HSG. 14pol. JPT-Geh. 6.2g |
| | | | | | NATURAL natur | 1-929504-5 | N | |
| 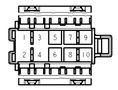 | 20 | 26 | 4 | | BLACK schwarz | 929504-4 | N | 10POS. JPT-HSG. 10pol. JPT-Geh. 4.6g |
| | | | | | NATURAL natur | 1-929504-4 | N | |
| 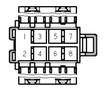 | 15 | 21 | 3 | | BLACK schwarz | 929504-3 | N | 8POS. JPT-HSG. 8pol. JPT-Geh. 3.9g |
| | | | | | NATURAL natur | 1-929504-3 | N | |
| | 10 | 16 | 2 | | BLACK schwarz | 929504-2 | N | 6POS. JPT-HSG. 6pol. JPT-Geh. 3.1g |
| | | | | | NATURAL natur | 1-929504-2 | N | |
| | 5 | 11 | 1 | | BLACK schwarz | 929504-1 | N | 4POS. JPT-HSG.. 4pol. JPT-Geh. 2.4g |
| | | | | | NATURAL natur | 1-929504-1 | N | |
| | | | | | GREEN gruen | 2-929504-1 | N | |
| CONTACT CAVITY NUMBERS Kammernummerierung | b | a | n | | COLOUR Farbe | TE CONNECTIVITY ORDER-NO. TE CONNECTIVITY Bestell-Nr. | REV | DESCRIPTION/WEIGHT Benennung/Gewicht |

NOTES:
Bemerkungen:

1 SUITABLE JUNIOR POWER TIMER CONTACTS SEE DRAWING: PN 1355046
Passende Junior Power Timer Kontakte siehe Zeichnung: PN 1355046

TE CONNECTIVITY-Nr.:1355046
MAX. ALLOWED WIRE SIZE 2.5MM²FLR
max. zulaessiger Leitungsquerschnitt 2.5mm² FLR

2 SUITABLE COUNTERPARTS:
Passende Gegenstuecke:

| | |
|---|---|
| 2.8mm FF TAB-HOUSING<br>2.8mm FF Flachstecker-Gehaeuse | TE CONNECTIVITY-Nr. 929505 |
| 2.8mm TAB-HEADER 90DEG<br>2.8mm Messerleiste 90° | TE CONNECTIVITY-Nr. 828801 |
| 2.8mm TAB-HEADER 180DEG<br>2.8mm Messerleiste 180° | TE CONNECTIVITY-Nr. 963357 |

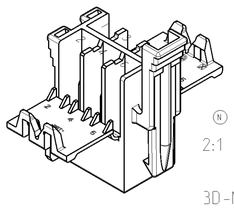


2:1

3D-MODEL (6 POS.)

THIS DRAWING IS A CONTROLLED DOCUMENT.
DIESES ZEICHNUNGSDOKUMENT WIRD DURCH AMP INCORPORATED KONTROLLIERT.
ANDERUNGEN IM DER TECHNISCHEN FORTSCHRITT DURCH TAG MODIFIZIERTEN
DIN ENTSPRECHEN NICHT ANDERNFALLS EXPRESSIV ANGEGEBENEN ANGABEN.

DIMENSIONS: MASSEINHEITEN: (MM)

TOLERANCES UNLESS OTHERWISE SPECIFIED: ALLGEMEINTOLERANZEN
N PLC ±0.2mm
1 PLC ±
2 PLC ± n. ISO 8015
3 PLC ±
4 PLC ±
ANGLES/W INKEL ±1.5°

MATERIAL: PBT -
FINISH/OBERFLAECHE/FARBE: SEE TABLE siehe Tabelle

| | | |
|---|---|---|
| DWN | A.RICHTER | 28AUG95 |
| CHK | J.HOSS | 26NOV07 |
| APVD | - | |
| PRODUCT SPEC PRODUKTSPEZ. | - | |
| APPLICATION SPEC VERARBEITUNGSSPEZ. | - | |
| WEIGHT GEWICHT | - | |

TE Connectivity

NAME: 4-22 POS. JUNIOR POWER TIMER-HOUSING
4-22Pol. Junior Power Timer-Gehaeuse

| SIZE | CAGE CODE | DRAWING NO. ZEICHNUNGS-NR. | RESTRICTED TO NUR FUER |
|---|---|---|---|
| A1 | 00779 | C-929504 | - |

CUSTOMER DRAWING /KUNDENZEICHNUNG
SCALE MASSSTAB 1:1 SHEET BLATT 1 OF VON 1 REV N4

4805 (3/11)
ProvENGINEER DRAWING