Chipsmall Limited consists of a professional team with an average of over 10 year of expertise in the distribution of electronic components. Based in Hongkong, we have already established firm and mutual-benefit business relationships with customers from,Europe,America and south Asia,supplying obsolete and hard-to-find components to meet their specific needs.

With the principle of “Quality Parts,Customers Priority,Honest Operation,and Considerate Service”,our business mainly focus on the distribution of electronic components. Line cards we deal with include Microchip,ALPS,ROHM,Xilinx,Pulse,ON,Everlight and Freescale. Main products comprise IC,Modules,Potentiometer,IC Socket,Relay,Connector.Our parts cover such applications as commercial,industrial, and automotives areas.

We are looking forward to setting up business relationship with you and hope to provide you with the best service and solution. Let us make a better world for our industry!

Contact us

Tel: +86-755-8981 8866 Fax: +86-755-8427 6832
Email & Skype: info@chipsmall.com Web: www.chipsmall.com
Address: A1208, Overseas Decoration Building, #122 Zhenhua RD., Futian, Shenzhen, China

RECOMMENDED HOLES PATTERN

RECOMMENDED PC BOARD THICKNESS: 1.6 mm

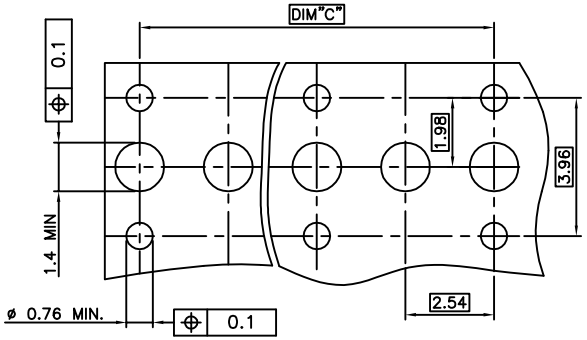

PRODUCT N°	HOUSING	DIM"C"	DIM"D"	NB. OF TER.	CONTACT PLACED IN CAVITY (TABLE ACCORDING VIEW A)																										
					1	2	3	4	5	6	7	8	9	10	11	12	13	14	15	16	17	18	19	20	21	22	23	24	25	26	27	28
95234–Y01LF	1 X 28 pos.	68.58	71.04	14	X		X		X		X		X		X		X		X		X		X		X		X		X		X	
95234–Y02LF	1 X 13 pos.	30.48	32.94	10	X	X	X	X	X				X	X	X	X	X															
95234–Y03LF	1 X 3 pos.	5.08	7.54	2	X		X																									
95234–Y04LF	1 X 7 pos.	15.24	17.70	4	X		X		X		X																					
95234–Y05LF	1 X 4 pos.	7.62	10.08	2	X			X																								
95234–Y06LF	1 X 14 pos.	33.02	35.48	10	X	X			X	X			X	X	X	X	X	X														

RoHS COMPATIBLE,
SEE NOTE 4

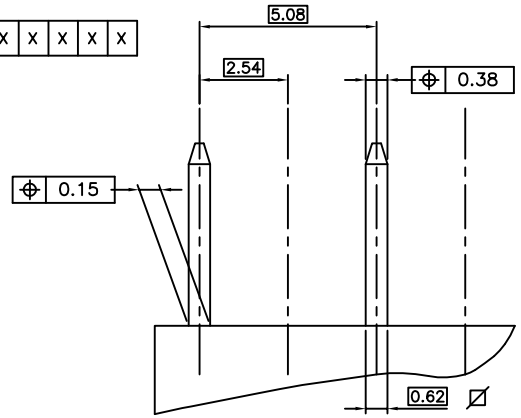

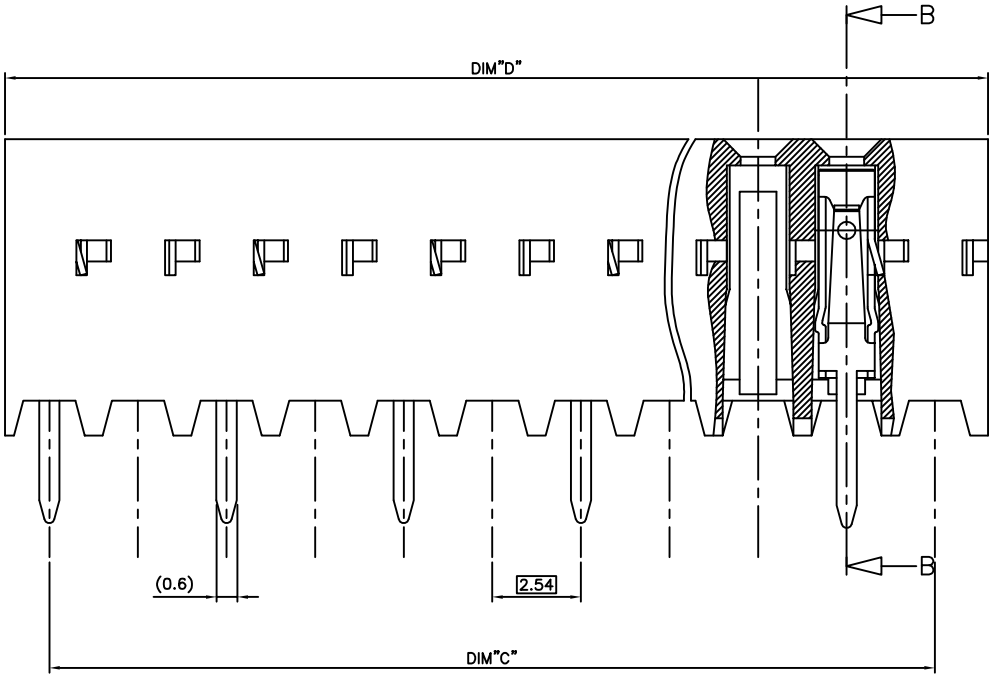

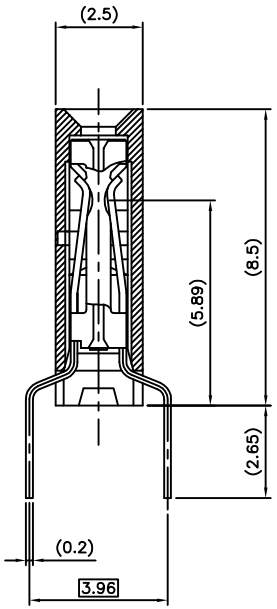

SECTION B–B

RECOMMENDED PINS PATTERN

NOTES:

1 – MATERIAL HOUSING: THERMOPLASTIC POLYESTER 30% GLASS FILLED, COLOUR BLUE. FLAME RETARDANT PER UL–94 CATEGORY V0.

2 – MATERIAL TERMINAL: PHOSPHOR BRONZE EXTRA HARD.

3 – CONNECTOR TO BE USED ON PC BOARD WITH NON PLATED THROUGH HOLES

4 – RoHS COMPATIBLE PRODUCT SPECIFICATIONS

a – PLATING:
– "LF" MEANS THE PRODUCT IS LEAD–FREE, 2µm MINIMUM MATTE TIN OVER 1.27µm MINIMUM NICKEL UNDERPLATE.

b – MANUFACTURING PROCESS COMPATIBILITY
– THE HOUSING WILL WITHSTAND EXPOSURE TO 260°C ±5°C SOLDER BATH TEMPERATURE FOR 5 SECONDS IN A WAVE SOLDER APPLICATION WITH A 1.6mm MIN THICK CIRCUIT BOARD.

c – LABELING:
– MEETS PACKAGING SPECS AS PER GS–14–920

d – LEGAL STATEMENT: SEE GS–47–0004

95234–4XXLF	5 µm Sn	Sn
95234–3XXLF	0.76 µm GOLD	Sn
PLATING CODE	CONTACT AREA	SOLDER TAIL
	PLATING THICKNESS OVER 1.27µm Ni	

mat'l. code: SEE NOTES				surface: ISO 1302	tolerance: ISO 406 ISO 1101	projection
Ltr	ecn no	dr	date	tolerances unless otherwise specified		
H	F07–0271	LMU	07.12.06	angles ±2°	linear ±0.3	mm
J	B–16001	LMU	13.10.04			
K	B–18504	LMU	14.09.08			scale 10:1
L	B–19123	LMU	14.1021	dr D.LEGRAND	95.11.17	
				engr P.NIZZI	95.11.17	
F	F04–0347	DLE	04.11.15	chr D.LEGRAND	95.11.17	
G	F06–0204	DLE	06.06.28	appd PNZ	95.11.17	
sheet index	revision sheet					

product family: DX VCC SR

title: DUAL ENTRY S.L OFF SET LEGS

dwg no: 95234 sheet 1 of 1 size A2

type: CUSTOMER Drawing

form: A2

Copyright FCI
FCIconnect.com
Printed: Oct 29, 2014
STATUS:Released
PDS: Rev :L