Chipsmall Limited consists of a professional team with an average of over 10 year of expertise in the distribution of electronic components. Based in Hongkong, we have already established firm and mutual-benefit business relationships with customers from,Europe,America and south Asia,supplying obsolete and hard-to-find components to meet their specific needs.

With the principle of “Quality Parts,Customers Priority,Honest Operation,and Considerate Service”,our business mainly focus on the distribution of electronic components. Line cards we deal with include Microchip,ALPS,ROHM,Xilinx,Pulse,ON,Everlight and Freescale. Main products comprise IC,Modules,Potentiometer,IC Socket,Relay,Connector.Our parts cover such applications as commercial,industrial, and automotives areas.

We are looking forward to setting up business relationship with you and hope to provide you with the best service and solution. Let us make a better world for our industry!

Contact us

Tel: +86-755-8981 8866 Fax: +86-755-8427 6832
Email & Skype: info@chipsmall.com Web: www.chipsmall.com
Address: A1208, Overseas Decoration Building, #122 Zhenhua RD., Futian, Shenzhen, China

THIS DRAWING IS UNPUBLISHED.
VERTRAULICHE UNVEROEFFENTLICHTE ZEICHNUNG
© COPYRIGHT 19 90 BY AMP INCORPORATED. ALL RIGHTS RESERVED. ALLE RECHTE VORBEHALTEN

RELEASED FOR PUBLICATION ,19-.
FREI FOR VEROEFFENTLICHUNG

MATED WITH:
PASSEND ZU:
–

LOC	DIST
AI	–

PROJEKT NR.: 90-52114

REVISIONS
ÄNDERUNGEN

P	LTR	DESCRIPTION BESCHREIBUNG	DATE	DWN	APVD
	D	Vordere Verrastlöcher im Deckel verengt auf 5.5 +0.2	13-AUG-91	LEHN.	–
	E	Deckel verstärkt, Ansicht T hinzu	19-AUG-93	GEB.	–
	F	Neue Zeichnung in CAD	22-JUN-98	A.RI	–

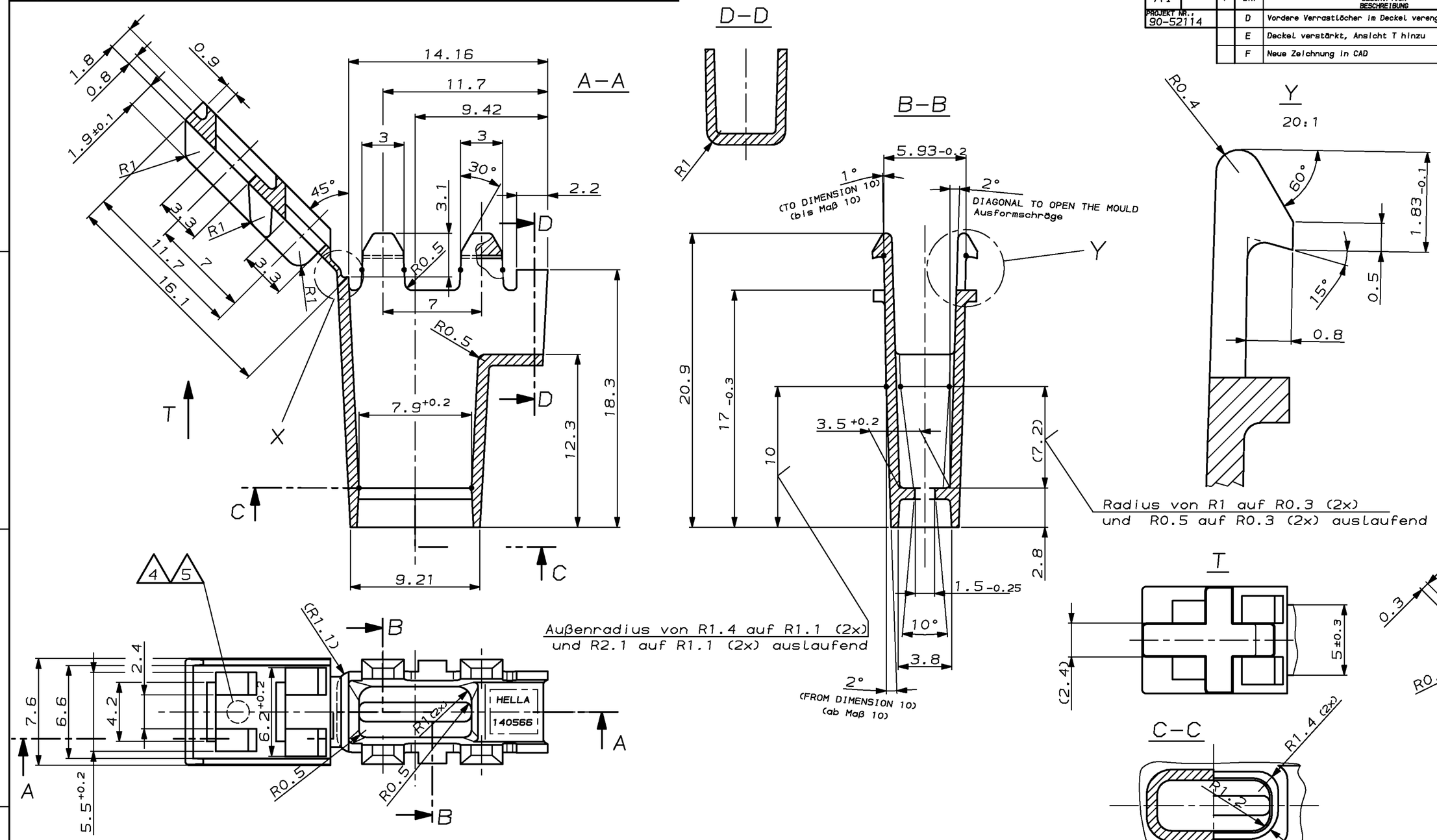

NOTES
Bemerkungen

1 WALLTHICKNESS EXEPT AS NOTED 0.8mm
Nicht bemaßte Wandstärken

2 NON SPECIFIED RADII R 0.3
Nicht bemaßte Radien

3 NON SPECIFIED DIAGONAL TO OPEN THE MOULD 3°
Nicht bemaßte Ausformschrägen

4 CHARACTERS ACC. TO DIN 1451 –
CHARACTERS 1mm, SUNK 0.2 mm, RAISED 0.15mm
Mittelschrift nach DIN 1451 –
Schrifthöhe 1mm, vertieft 0.2mm, erhaben 0.15mm

5 CAVITY MARKING
Nestmarkierung

THIS DRAWING IS A CONTROLLED DOCUMENT FOR AMP INCORPORATED. IT IS SUBJECT TO CHANGE AND THE CONTROLLING ENGINEERING ORGANIZATION SHOULD BE CONTACTED FOR THE LATEST REVISION. DIESES ZEICHNUNGSDOKUMENT WIRD DURCH AMP INCORPORATED KONTROLLIERT. ÄNDERUNGEN, DIE DEN TECHNISCHEN FORTSCHRITT DIENEN, SIND VORBEHALTEN. DEM JEWEILS LETZTGÜLTIGEN ÄNDERUNGSSTAND DÜRFEN SIE AUF ANFRAGE.

DIMENSIONS: DIMENSIONEN: mm

TOLERANCES UNLESS OTHERWISE SPECIFIED: ALLGEMEINTOLERANZEN
n. ISO 8015
n. ISO 2768 - mH -E
n. DIN 16901 -130
0 PLC ±–
1 PLC ±–
2 PLC ±–
3 PLC ±–
ANGLES/WINKEL ± 2°

MATERIAL –
FINISH/OBERFLAECHE/FARBE –

CUSTOMER PART NO	AMP PART NO	REV.	MATERIAL	SURFACE / COLOR	DESCRIPTION	ITEM NO
–	–	–	–	–	–	–
–	962569-1	F	PEI Rec.50%	BLACK/schwarz	Isolierhuelse	–

DWN M.Geberzahn 15-OCT-90
CHK H.Herrmann 24-OCT-90
APVD –
PRODUCT SPEC PRODUKTSPEZ. –
APPLICATION SPEC VERABEITUNGSSPEZ. –
WEIGHT GEWICHT –

AMP
AMP Deutschland GmbH
D – 63225 Langen

NAME
CONTACT BOOT FOR SPECIAL FASTON
Isolierhuelse

SIZE	CAGE CODE	DRAWING NO ZEICHNUNGS-NR.	RESTRICTED TO NUR FUER
A2	00779	C-962569	–

CUSTOMER DRAWING /KUNDENZEICHNUNG
MASSSTAB 5:1 BLATT 1 OF 1 VON 1 REV F

AMP 1471-9 REV 27JUN96

13-AUG-98 13:20:27 ar5200 g.962569.1.c (In EDM)