Chipsmall Limited consists of a professional team with an average of over 10 year of expertise in the distribution of electronic components. Based in Hongkong, we have already established firm and mutual-benefit business relationships with customers from,Europe,America and south Asia,supplying obsolete and hard-to-find components to meet their specific needs.

With the principle of “Quality Parts,Customers Priority,Honest Operation,and Considerate Service”,our business mainly focus on the distribution of electronic components. Line cards we deal with include Microchip,ALPS,ROHM,Xilinx,Pulse,ON,Everlight and Freescale. Main products comprise IC,Modules,Potentiometer,IC Socket,Relay,Connector.Our parts cover such applications as commercial,industrial, and automotives areas.

We are looking forward to setting up business relationship with you and hope to provide you with the best service and solution. Let us make a better world for our industry!

Contact us

Tel: +86-755-8981 8866 Fax: +86-755-8427 6832
Email & Skype: info@chipsmall.com Web: www.chipsmall.com
Address: A1208, Overseas Decoration Building, #122 Zhenhua RD., Futian, Shenzhen, China

DIESE ZEICHNUNG IST EIN KONTROLLIERTES DOKUMENT. THIS DRAWING IS A CONTROLLED DOCUMENT.

MATED WITH: PASSEND ZU:	LOC	DIST
-	AI	—

REVISIONS / AENDERUNGEN

P	LTR	DESCRIPTION BESCHREIBUNG	DATE	DWN	APVD
PROJECT NR,;91- 52062		D4	REVISED PER ECR-11-025934	29DEC11	RK	HMR

Ⓒ

1 SHAPE CAN DIFFER FROM DRAWING IN MARKED AREA
Gestalt kann in markiertem Bereich von der Darstellung abweichen

M1:1

OPTIONAL INTERRUPTED
wahlweise unterbrochen

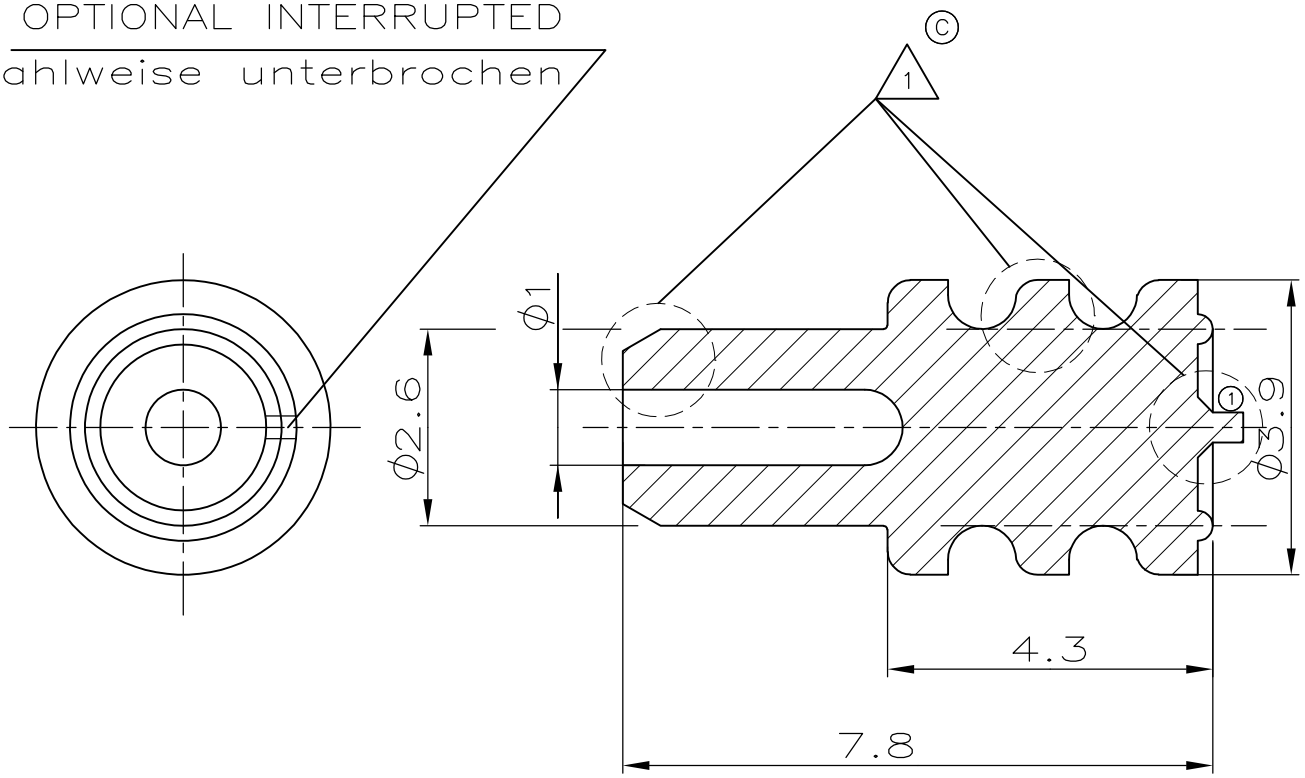

Ⓒ 2 INCLUSIONS OF AIR NOT PERMITTED
keine Lufteinschlüsse zulässig

963531-2	SILICON, SHORE A 50° LUBRICATED, lubriziert	WHITE Weiss
963531-1	SILICON, SHORE A 50°	WHITE Weiss
TE Connectivity ORDER NO. TE Connectivity Bestell-Nr.	MATERIAL Material	FINISH Oberfläche/Farbe

THIS DRAWING IS UNPUBLISHED. VERTRAULICHE UNVEROEFFENTLICHTE ZEICHNUNG.
Ⓒ COPYRIGHT - BY -
ALL RIGHTS RESERVED.
RELEASED FOR PUBLICATION FREI FUER VEROEFFENTLICHUNG

DIMENSIONS: MASSE\NHEITEN mm

TOLERANCES UNLESS OTHERWISE SPECIFIED: ALLGEMEINTOLERANZEN
ISO 8015 ISO 2768 - mH -E DIN 16901 - 140

0 PLC	± -	
1 PLC	± 0.3	
2 PLC	± -	
3 PLC	± -	
4 PLC	± -	
ANGLES / WINKEL	± -	

DWN R. SCHAEFER 17-FEB-97
CHK U. MUENK 17-FEB-97
APVD —
PRODUCT SPEC PRODUKTSPEZ. —
APPLICATION SPEC VERARBEITUNGSSPEZ. —
WEIGHT GEWICHT CA. 0.1G

MATERIAL SEE TABLE Siehe Tabelle
FINISH OBERFLAECHE/FARBE SEE TABLE Siehe Tabelle

TE Connectivity

NAME
PLUG FOR CAVITY DIA 3.6 MM
BLINDSTOPFEN FUER R KAMMER DIA 3.6MM

SIZE	CAGE CODE	DRAWING NO ZEICHNUNGS-NR.	RESTRICTED TO NUR FUER
A4	00779	C-963531	—

CUSTOMER DRAWING / KUNDENZEICHNUNG

SCALE MASSSTAB 10:1 | SHEET BLATT 1 OF VON 1 | REV D4